REVISIONS		
ISSUE No.	DATE	COMMENTS
REV-1	29/10/2021	PRELIMINARY ISSUE
REV-2	08/11/2021	PRELIMINARY ISSUE
REV-3	09/11/2021	PRELIMINARY ISSUE
REV-4	01/02/2022	PRELIMINARY ISSUE
REV-5	25/05/2022	CONSTRUCTION ISSUE
REV-6	26/08/2022	AMENDED CONSTRUCTION ISSUE

DRAWING LIST	
SHEET No.	SHEET NAME
01	EXISTING AND PROPOSED SITE PLANS
02	FLOOR PLAN
03	SETOUT PLAN
04	ELEVATIONS
05	ELEVATIONS
06	SECTIONS
07	SECTIONS & DETAILS
08	ELECTRICAL PLAN & WINDOW/ DOOR SCHEDULES
09	GENERAL AND BAL NOTES
10	3D-VIEWS

CONSTRUCTION PLANS

BUSHFIRE ATTACK LEVEL - *12.5*

PENNO DRAFTING & DESIGN

SPECIALISING IN: BUILDING DESIGN - NEW HOMES, RENOVATIONS, QUALITY PLANNING & DESIGN

ADDRESS: 33 BREEN STREET BENDIGO, PHONE: (03)5444 3315 - 0417 033 606

E-MAIL: plans@pennodrafting.com.au, REGISTRATION No.: CDP-AD 57597

Design Matters National
The peak body for the building design profession
Member

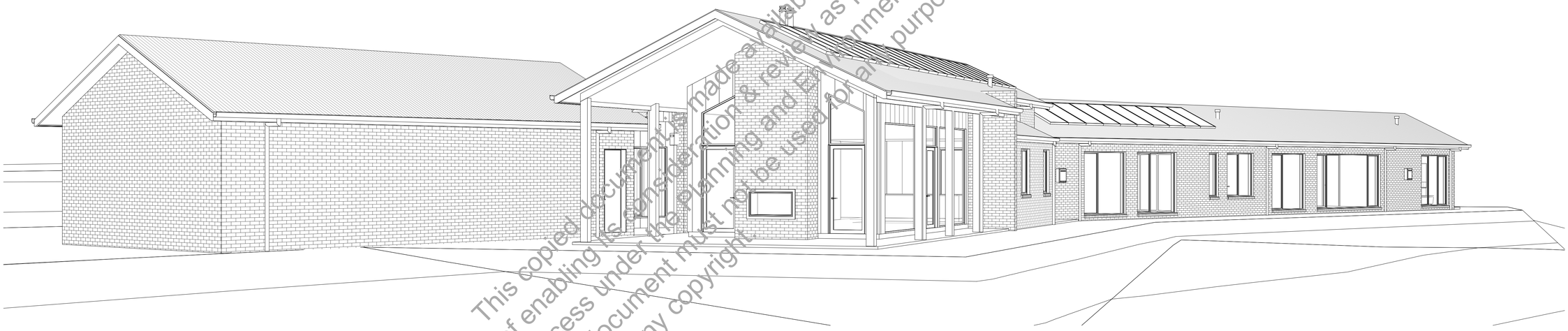

This copied document is made available for the sole purpose of enabling its consideration & review as part of a planning process under the Planning and Environment Act 1987. This document must not be used for any purpose which may breach any copyright.

PROJECT INFORMATION

CLIENT: AMY AND GLENN TURNBULL

ADDRESS: LOT 38 DARLING COURT, WANDONG

REF No.: R21-220

DATE: 26/08/2022

CONSTRUCTION PLANS

BUSHFIRE ATTACK LEVEL - *12.5*

WIND CLASS (WIND SPEED RATING) - N3 (41 m/s)

BUILDING PERMIT APPROVAL REQUIRED BEFORE ORDERING MATERIALS

ALL LEVELS ARE APPROXIMATE ONLY. EXACT LEVELS TO BE CHECKED AND CONFIRMED ON SITE BY BUILDER

ALL DIMENSIONS TO BE CHECKED AND CONFIRMED ON SITE BY BUILDER DO NOT SCALE DRAWINGS

IF APPLICABLE SEPTIC SYSTEM TO BE INSTALLED IN ACCORDANCE WITH APPROVED SEPTIC LAYOUT PLAN

UNDERGROUND SERVICES

ALL UNDERGROUND SERVICE LOCATIONS SHOWN ON THESE PLANS ARE APPROXIMATE

ALL UNDERGROUND SERVICES AND PIPES NEED TO BE VISUALLY LOCATED PRIOR TO COMMENCEMENT OF WORKS

DISCREPANCIES BETWEEN ONSITE LOCATIONS AND THESE PLANS NEED TO BE REPORTED TO PENNO DRAFTING AND DESIGN

SEPTIC

REFER TO LAND CAPABILITY ASSESSMENT REPORT BY PROVINCIAL GEOTECHNICAL Pty. Ltd

LLA TO AVOID THE TPZ OF EXISTING TREES

LLA TO BE SETBACK A MIN. 3.0m FROM ANY BOUNDARIES, BUILDINGS AND SWIMMING POOLS

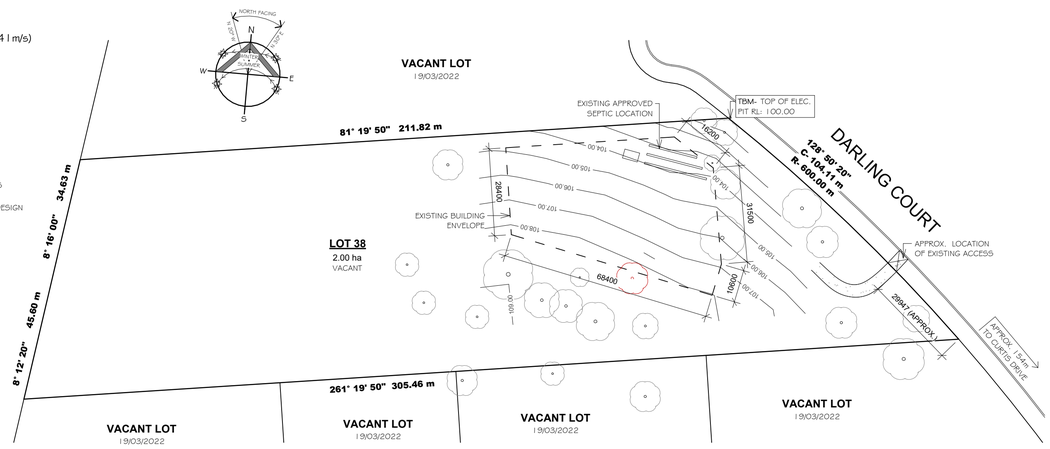

EXISTING O/A SITE PLAN

1 : 1000

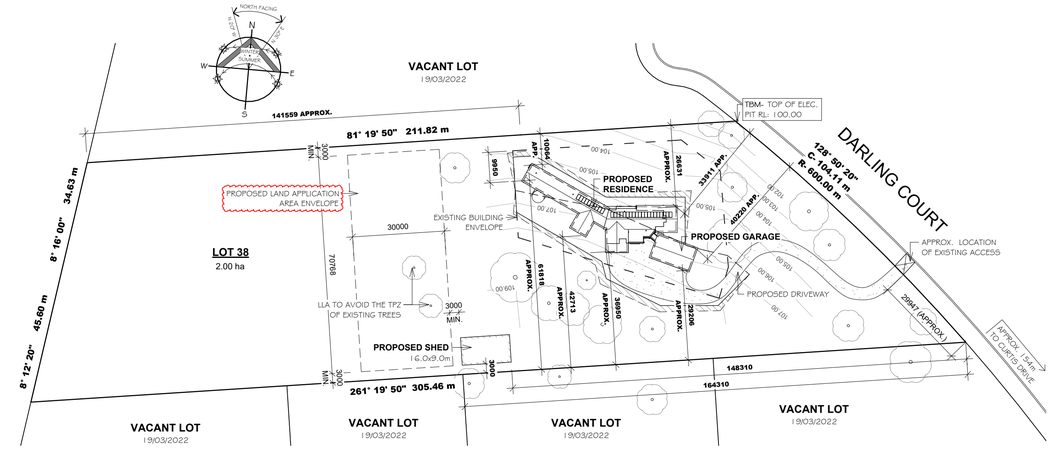

PROPOSED O/A SITE PLAN

1 : 1000

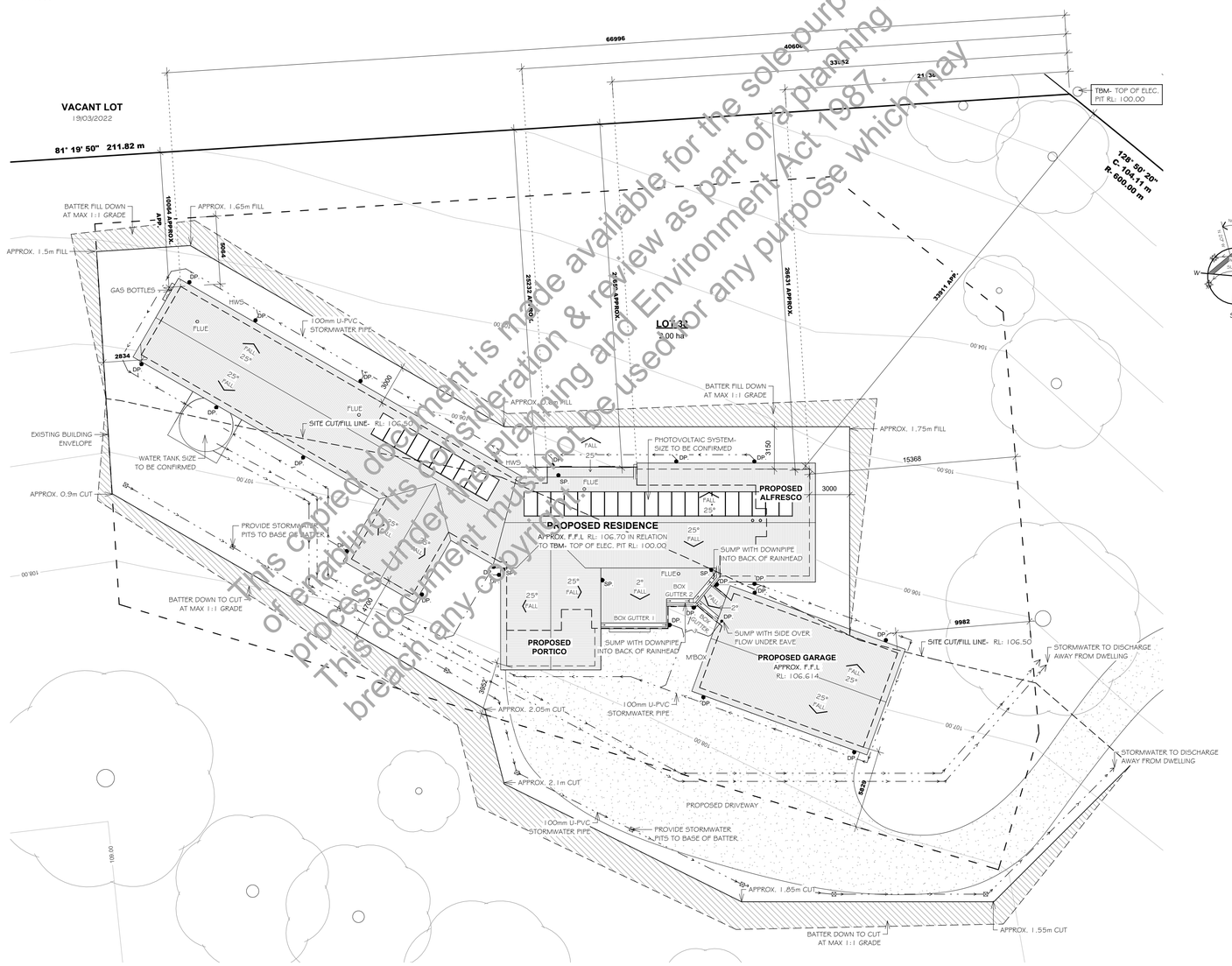

PROPOSED SITE PLAN

1 : 200

This copied document is made available for the sole purpose of enabling its consideration & review as part of a planning process under the Planning and Environment Act 1987. This document must not be used for any purpose which may breach any copyright.

TDMSIQWZPO 23 Mar 2022
Assessor GRANT PENNO
Accreditation No. DMN/150312
Address LOT 38 DARLING COURT WANDONG VIC 3758
https://www.fr5.com.au/QRCodeLanding?hubSite=TDMSIQWZPO

PENNO DRAFTING & DESIGN
33 BREEN STREET BENDIGO, Ph: (03)54443315, CDP-AD 57597

Design Matters National
The peak body for the building design profession
Member

© COPYRIGHT

DO NOT SCALE DRAWINGS

PROJECT CLIENT: AMY AND GLENN TURNBULL

PROJECT ADDRESS: LOT 38 DARLING COURT, WANDONG

REFERENCE No:	R21-220
ISSUE NUMBER:	REV-6
DATE:	26/08/2022
DRAWN BY:	B.M
CHECKED BY:	G.P

DRAWING: EXISTING AND PROPOSED SITE PLANS

SCALE: As indicated (A1 SHEET) SHEET No.: 01

CONSTRUCTION PLANS

BUSHFIRE ATTACK LEVEL - *12.5*

BUILDING PERMIT APPROVAL REQUIRED BEFORE ORDERING MATERIALS

ALL DIMENSIONS TO BE CHECKED AND CONFIRMED ON SITE BY BUILDER DO NOT SCALE DRAWINGS

ALL WET AREAS TO COMPLY WITH AS 3740 AND PART 3.8.1 OF THE NCC VOLUME TWO

IF APPLICABLE LIFT OF HINGES TO BE IN ACCORDANCE WITH NCC VOL. 2 CLAUSE 3.8.3.3

SMOKE ALARMS INSTALLED IN ACCORDANCE WITH AS 3786 AND NCC VOL. 2 SECTION 3.7.2. WHERE MULTIPLE SMOKE ALARMS ARE INSTALLED THEY ARE REQUIRED TO BE INTERCONNECTED

ANY/ ALL MECHANICAL VENTILATION TO BE IN ACCORDANCE WITH NCC 3.8.5.2 AND VENTED DIRECTLY OUTSIDE VIA DUCTS TO FLUE OR WALL VENTS, IF VENTED INTO ROOF SPACE, THE ROOF SPACE MUST VENTED IN ACCORDANCE WITH NCC 3.8.7.4

MINIMUM FLOW RATES FOR EXHAUST FANS
- 25 Ls MIN. FOR EXHAUST FANS IN BATHROOMS OR SANITARY COMPARTMENTS
- 40 Ls MIN. FOR EXHAUST FANS IN KITCHENS OR LAUNDRYS

ENGINEERING NOTE

CONCRETE SLAB AND FOOTINGS TO ENGINEERS DESIGN

ALFRESCO AND PORTICO ROOFS TO TO ENGINEERS DESIGN, INCLUDING RAFTERS, BEAMS AND RIDGE BEAMS

MARKED GALV. LINTELS TO ENGINEERS DESIGN

PRE-FABRICATED WALLS NOTE

ALL TIMBER WALLS TO BE PRE-FABRICATED, ALL WALL MEMBERS TO BE DESIGNED BY TRUSS/ WALL MANUFACTURER, (INCL. TOP PLATES, BOTTOM PLATES, COMMON STUDS, OPENING STUDS & LINTLES)

BRACING NOTE

ALL WALL BRACING TO BE DESIGNED BY TRUSS / WALL MANUFACTURER OR BY ENGINEER

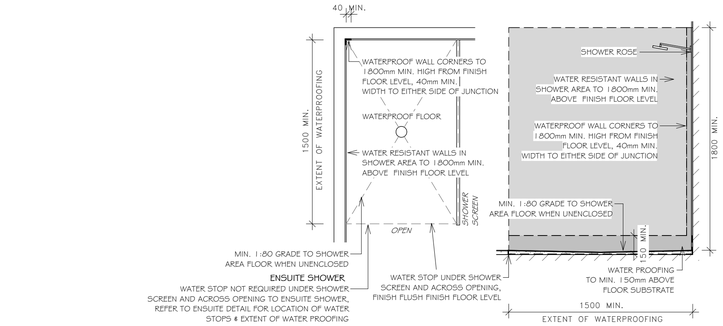

ENSUITE SHOWER

WATER STOP NOT REQUIRED UNDER SHOWER SCREEN AND ACROSS OPENING TO ENSUITE SHOWER, REFER TO ENSUITE DETAIL FOR LOCATION OF WATER STOPS & EXTENT OF WATER PROOFING

REFER FIGURE C1(b) OF AS 3740

TYPICAL UNENCLOSED SHOWER DETAIL

1 : 25

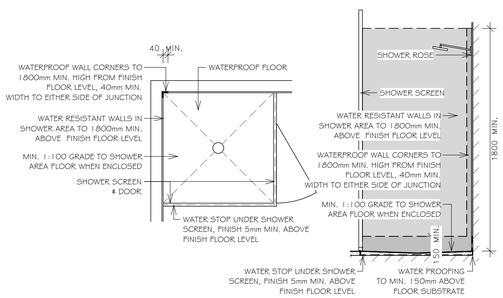

REFER FIGURE C1(a) OF AS 3740

TYPICAL ENCLOSED SHOWER DETAIL

1 : 25

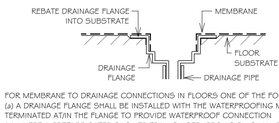

FOR MEMBRANE TO DRAINAGE CONNECTIONS IN FLOORS ONE OF THE FOLLOWING SHALL APPLY,
(a) A DRAINAGE FLANGE SHALL BE INSTALLED WITH THE WATERPROOFING MEMBRANE TERMINATED ATAN THE FLANGE TO PROVIDE WATERPROOF CONNECTION
(b) WHERE A PREFABRICATED SHOWER TRAY IS USED, PROVISION SHALL BE MADE TO DRAIN THE TILE BE AND PROVIDE A WATERPROOF CONNECTION TO THE DRAIN

REFER CLAUSE 3.1.4 & FIGURE 3.8 & 3.9 OF AS 3740

DRAIN / MEMBRANE DETAIL

1 : 10

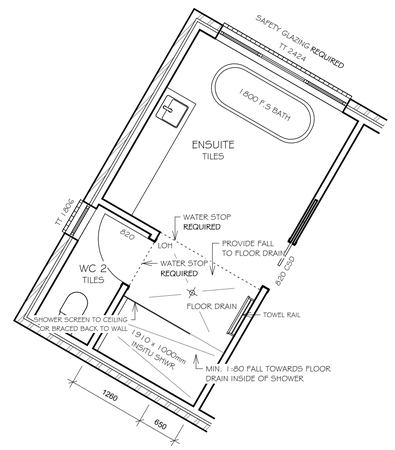

ENSUITE DETAIL

1 : 50

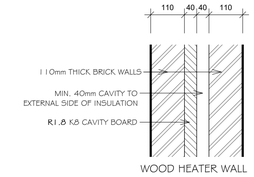

WALL DETAIL

1 : 10

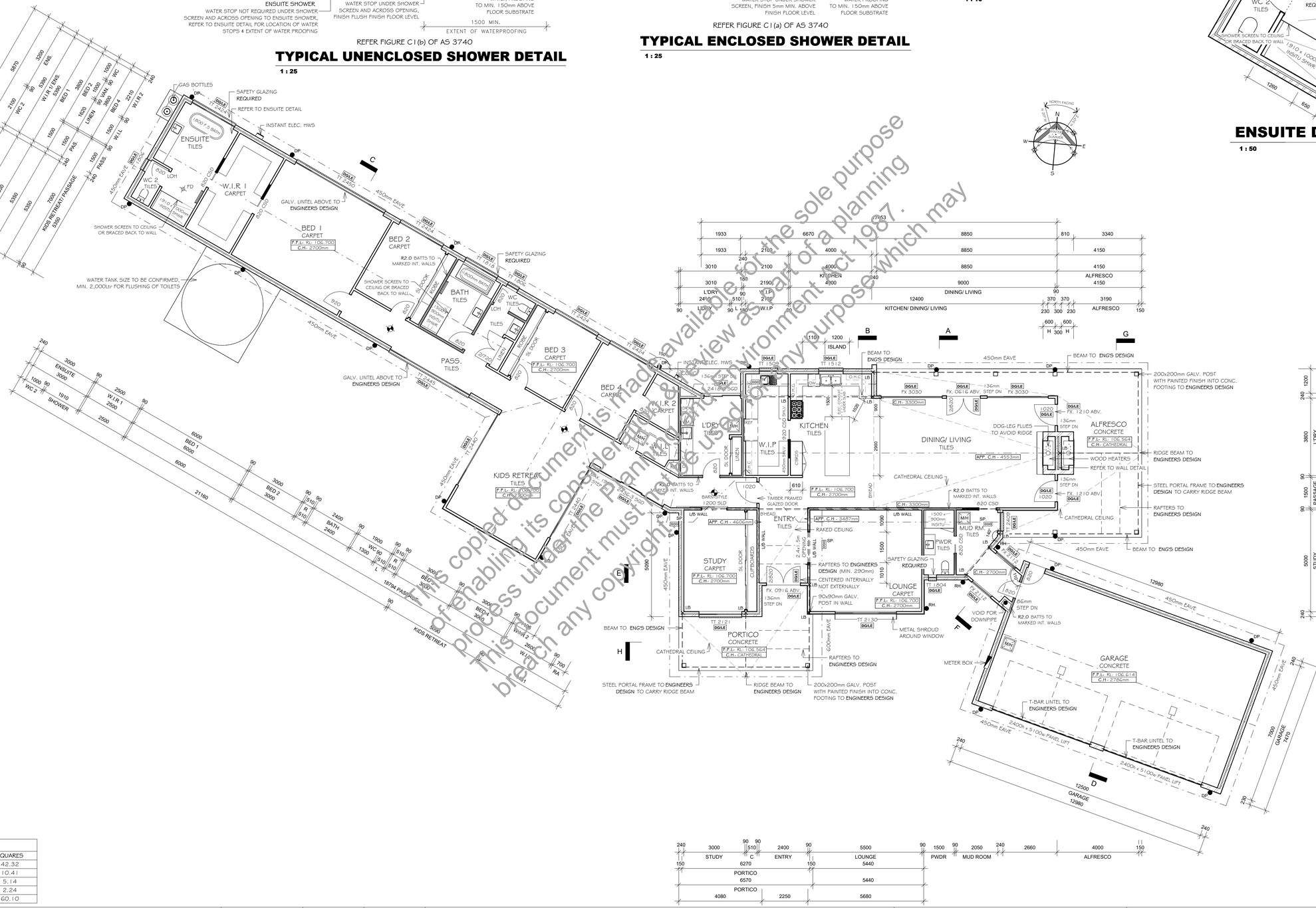

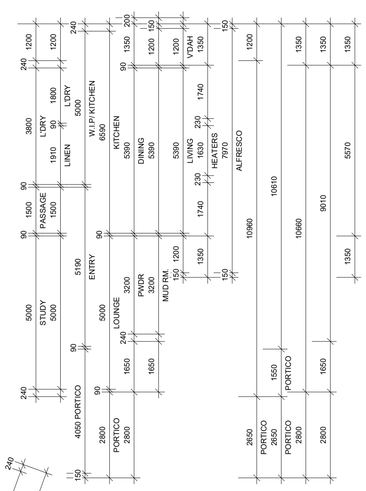

This copied document is made available for the sole purpose of enabling its consideration and review as part of a planning process under the Planning and Environment Act 1987. This document must not be used for any purpose which may breach any copyright.

LEGEND
- MB - METER BOX
- SA - SMOKE ALARM
- SEF - SEALED EXHAUST FAN
- FD - FLOOR DRAIN
- MH - MAN HOLE
- DP - DOWNPIPE
- RH - RAINHEAD & DOWNPIPE
- SPR - SPREADER
- LB - LOADBEARING POINT
- DGLE - DOUBLE WITH LOW E GLAZING
- LOH - LIFT OFF HINGES

PROPOSED AREA SCHEDULE		
NAME	AREA	SQUARES
RESIDENCE	393.13 m²	42.32
GARAGE	96.69 m²	10.41
ALFRESCO/ VERANDAHS	47.71 m²	5.14
PORTICO	20.82 m²	2.24
GRAND TOTAL	558.35 m²	60.10

TDMSIQWZPO 23 Mar 2022
Assessor No. GRANT PENNO
Accreditation No. DMN/10/0312
Address LOT 38 DARLING COURT WANDONG VIC 3758
https://www.fy5.com.au/QRCode/Landing?PublicId=72MBQWZPO

PENNO DRAFTING & DESIGN
33 BREEN STREET BENDIGO, Ph: (03)54443315, CDP-AD 57597

Design Matters National — The peak body for the building design profession — Member

© COPYRIGHT

DO NOT SCALE DRAWINGS

PROJECT CLIENT: AMY AND GLENN TURNBULL

PROJECT ADDRESS: LOT 38 DARLING COURT, WANDONG

REFERENCE No:	R21-220
ISSUE NUMBER:	REV-6
DATE:	26/08/2022
DRAWN BY:	B.M
CHECKED BY:	G.P

DRAWING: FLOOR PLAN

SCALE: As indicated (A1 SHEET) | SHEET No.: 02

CONSTRUCTION PLANS

BUSHFIRE ATTACK LEVEL - *12.5*

BUILDING PERMIT APPROVAL REQUIRED BEFORE ORDERING MATERIALS

ALL DIMENSIONS TO BE CHECKED AND CONFIRMED ON SITE BY BUILDER DO NOT SCALE DRAWINGS

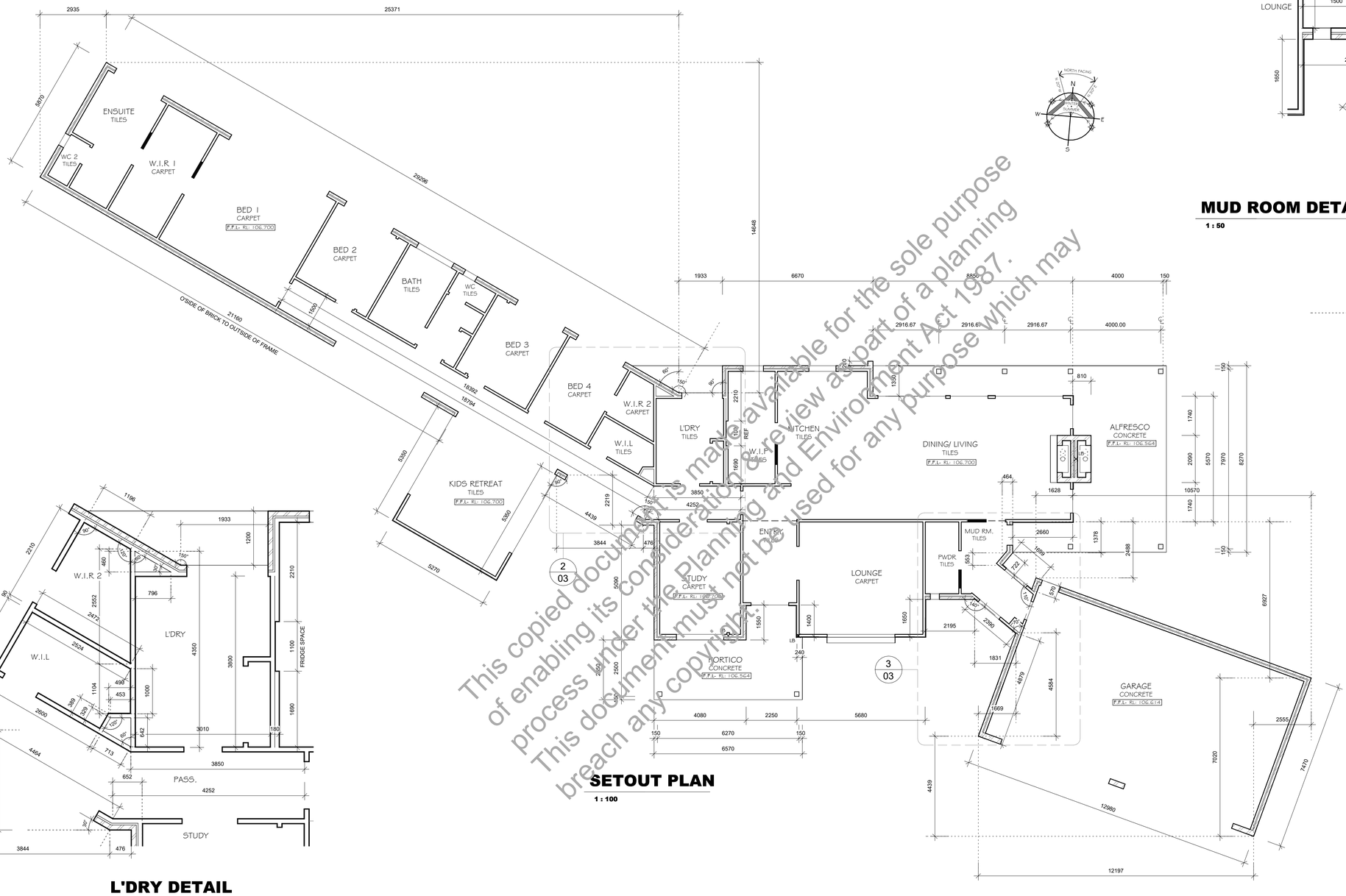

SETOUT PLAN

1 : 100

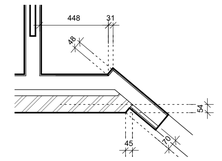

MUD ROOM DETAIL 2

1 : 20

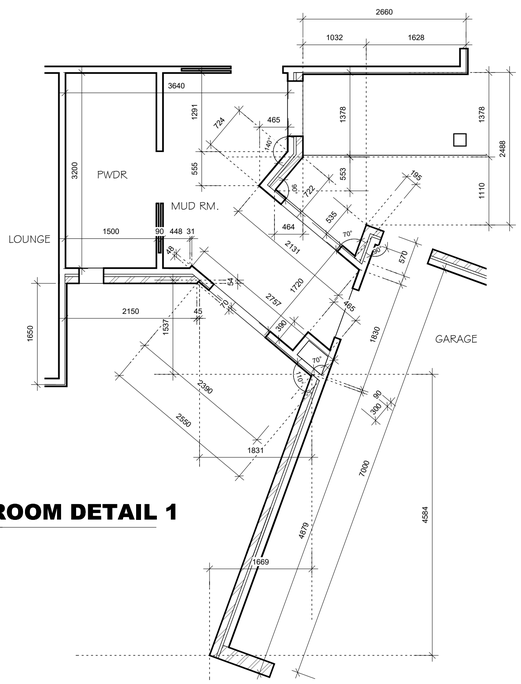

MUD ROOM DETAIL 1

1 : 50

L'DRY DETAIL

1 : 50

This copied document is made available for the sole purpose of enabling its consideration & review as part of a planning process under the Planning and Environment Act 1987. This document must not be used for any purpose which may breach any copyright.

TDMSIQWZPO 23 Mar 2022
Assessor GRANT PENNO
Accreditation No. DMN/10/0312
Address LOT 38 DARLING COURT WANDONG VIC 3758
https://www.h5.com.au/QRCode/Landing?Publicid=TDMSIQWZPO
7 NATIONWIDE HOUSE ENERGY RATING 98.8 www.nathers.gov.au

PENNO DRAFTING & DESIGN
33 BREEN STREET BENDIGO, Ph: (03)54443315, CDP-AD 57597

Design Matters National — The peak body for the building design profession — Member

© COPYRIGHT

DO NOT SCALE DRAWINGS

PROJECT CLIENT:	AMY AND GLENN TURNBULL
PROJECT ADDRESS:	LOT 38 DARLING COURT, WANDONG
REFERENCE No:	R21-220
ISSUE NUMBER:	REV-6
DATE:	26/08/2022
DRAWN BY:	B.M
CHECKED BY:	G.P
DRAWING:	SETOUT PLAN
SCALE:	As indicated (A1 SHEET)
SHEET No.:	03

CONSTRUCTION PLANS

BUSHFIRE ATTACK LEVEL - *12.5*

BUILDING PERMIT APPROVAL REQUIRED BEFORE ORDERING MATERIALS

ALL LEVELS ARE APPROXIMATE ONLY. EXACT LEVELS TO BE CHECKED AND CONFIRMED ON SITE BY BUILDER.

ALL DIMENSIONS TO BE CHECKED AND CONFIRMED ON SITE BY BUILDER DO NOT SCALE DRAWINGS

WHERE HIGH-FRONTED GUTTERS ARE INSTALLED, AN OVERFLOW METHOD OR SLOTTED GUTTERS MUST BE INSTALLED

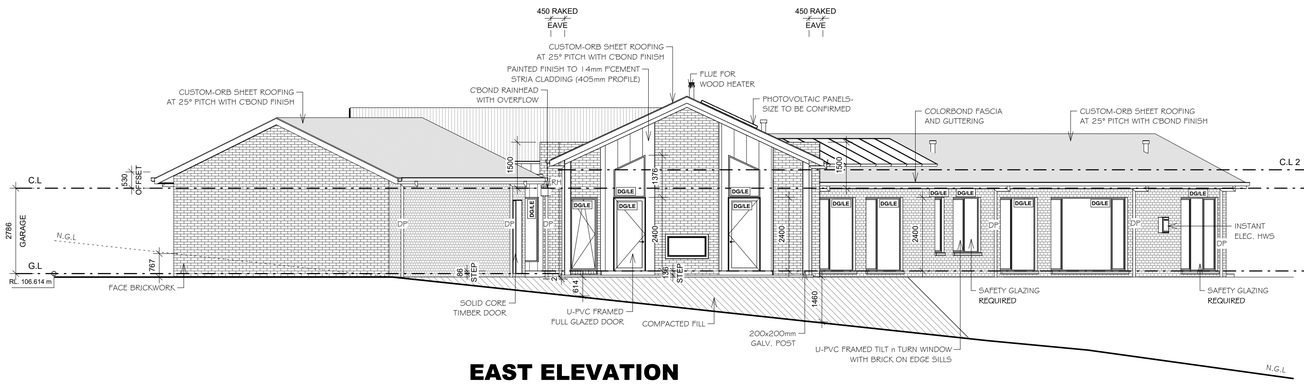

EAST ELEVATION

1 : 100

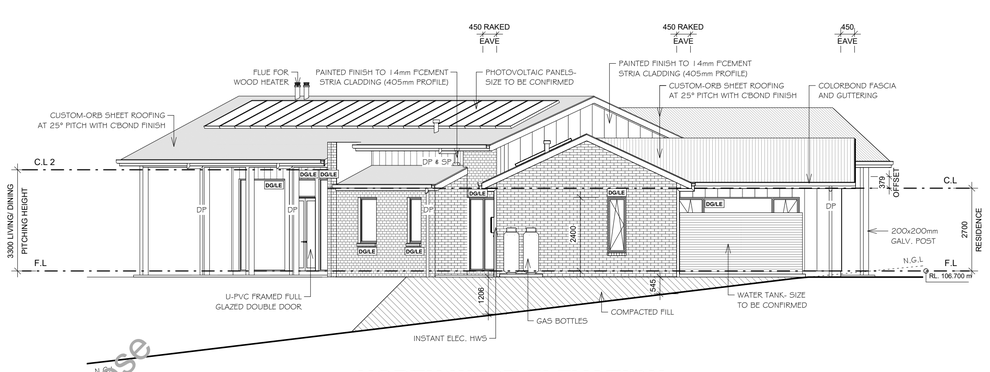

NORTH WEST ELEVATION

1 : 100

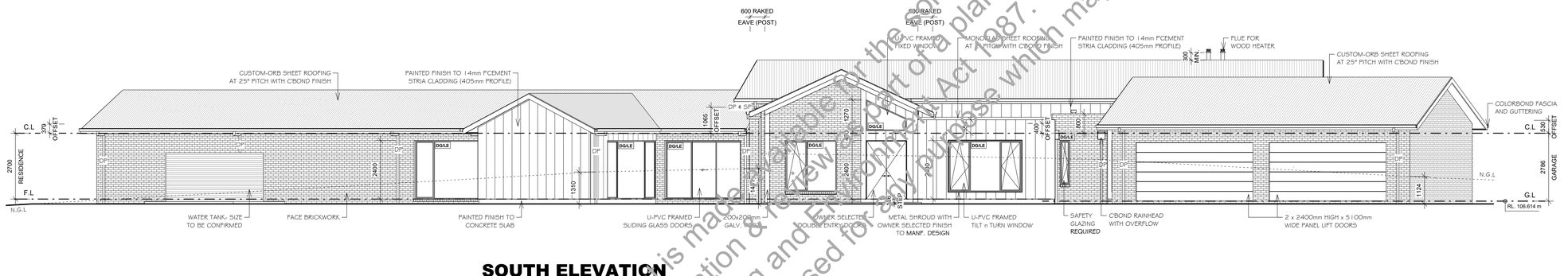

SOUTH ELEVATION

1 : 100

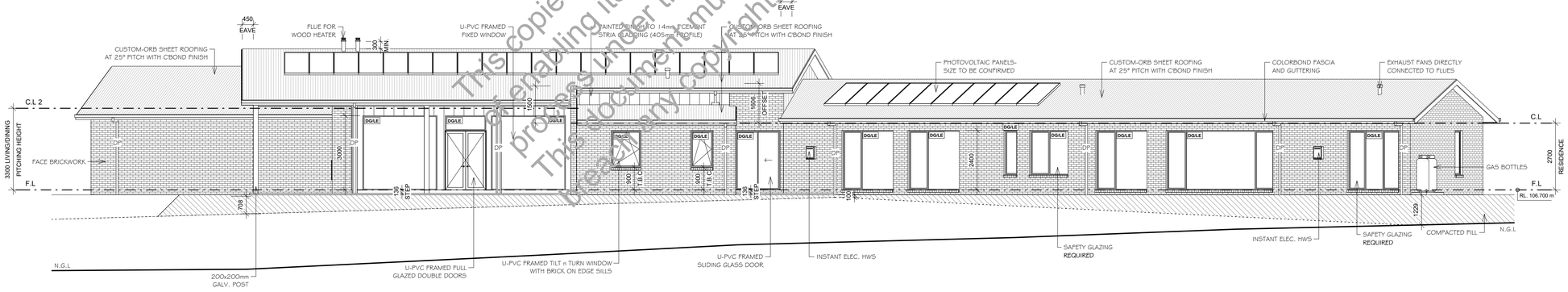

NORTH ELEVATION

1 : 100

This copied document is made available for the sole purpose of enabling its consideration & review as part of a planning process under the Planning and Environment Act 1987. This document must not be used for any purpose which may breach any copyright.

7 NATIONWIDE HOUSE ENERGY RATING 98,8 MJ/m²
TDMSIQWZPO 23 Mar 2022
Assessor GRANT PENNO
Accreditation No. DMN/10/0312
Address LOT 38 DARLING COURT WANDONG VIC 3758
https://www.hb.csiro.au/QRCode/Loading?Publisher=TDM&QKEY=TDMSIQWZPO

PENNO DRAFTING & DESIGN
33 BREEN STREET BENDIGO, Ph: (03)54443315, CDP-AD 57597

Design Matters National
The peak body for the building design profession
Member

© COPYRIGHT

DO NOT SCALE DRAWINGS

PROJECT CLIENT: AMY AND GLENN TURNBULL

PROJECT ADDRESS: LOT 38 DARLING COURT, WANDONG

REFERENCE No:	R21-220
ISSUE NUMBER:	REV-6
DATE:	26/08/2022
DRAWN BY:	B.M
CHECKED BY:	G.P

DRAWING: ELEVATIONS

SCALE: 1 : 100 (A1 SHEET) SHEET No.: 04

CONSTRUCTION PLANS

BUSHFIRE ATTACK LEVEL - *12.5*

BUILDING PERMIT APPROVAL REQUIRED BEFORE ORDERING MATERIALS

ALL LEVELS ARE APPROXIMATE ONLY. EXACT LEVELS TO BE CHECKED AND CONFIRMED ON SITE BY BUILDER.

ALL DIMENSIONS TO BE CHECKED AND CONFIRMED ON SITE BY BUILDER DO NOT SCALE DRAWINGS

WHERE HIGH-FRONTED GUTTERS ARE INSTALLED, AN OVERFLOW METHOD OR SLOTTED GUTTERS MUST BE INSTALLED

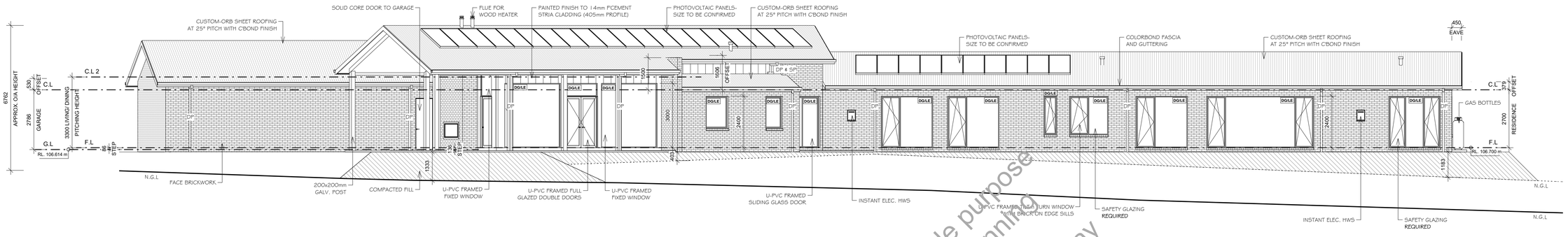

NORTH EAST ELEVATION

1 : 100

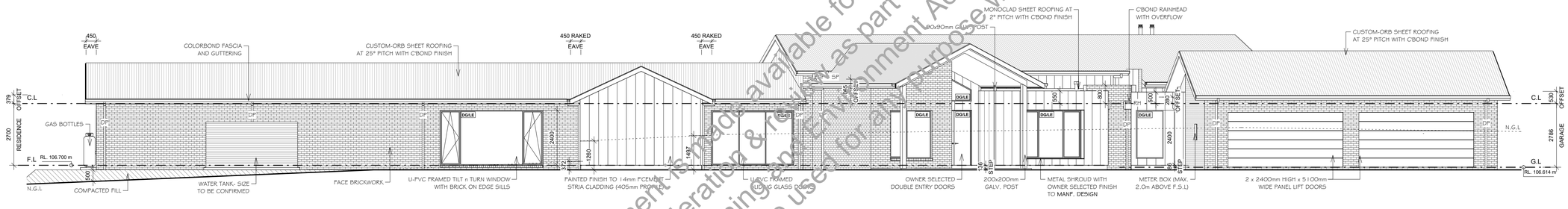

SOUTH WEST ELEVATION 1

1 : 100

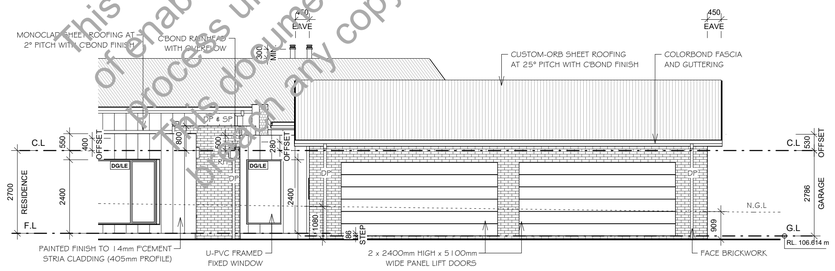

SOUTH WEST ELEVATION 2

1 : 100

this copied document is made available for the sole purpose of enabling its consideration & review as part of a planning process under the Planning & Environment Act 1987. This document must not be used for any purpose which may infringe any copyright.

7 NATIONWIDE HOUSE ENERGY RATING 98.8 www.nathers.gov.au
TDMSIQWZPO 23 Mar 2022
Assessor Accreditation No. GRANT PENNO DMN/10/0312
Address LOT 38 DARLING COURT WANDONG VIC 3758
https://www.65.com.au/QR/code/ending?hubSid=72M8QWZPO

PENNO DRAFTING & DESIGN
33 BREEN STREET BENDIGO, Ph: (03)54443315, CDP-AD 57597

Design Matters National — The peak body for the building design profession — Member

© COPYRIGHT

DO NOT SCALE DRAWINGS

PROJECT CLIENT: AMY AND GLENN TURNBULL

PROJECT ADDRESS: LOT 38 DARLING COURT, WANDONG

REFERENCE No:	R21-220
ISSUE NUMBER:	REV-6
DATE:	26/08/2022
DRAWN BY:	B.M
CHECKED BY:	G.P

DRAWING: ELEVATIONS

SCALE: 1 : 100 (A1 SHEET) SHEET No.: 05

CONSTRUCTION PLANS

BUSHFIRE ATTACK LEVEL - *12.5*

WIND CLASS (WIND SPEED RATING) - N3 (41 m/s)

BUILDING PERMIT APPROVAL REQUIRED BEFORE ORDERING MATERIALS

ALL DIMENSIONS TO BE CHECKED AND CONFIRMED ON SITE BY BUILDER DO NOT SCALE DRAWINGS

ALL PRIMARY TIMBER BUILDING ELEMENTS TO BE TREATED IN ACCORDANCE WITH AS 1684

TERMITE MANAGEMENT IN ACCORDANCE WITH AS 3660.1

ENGINEERING NOTE

CONCRETE SLAB AND FOOTINGS TO ENGINEERS DESIGN

ALFRESCO AND PORTICO ROOFS TO TO ENGINEERS DESIGN, INCLUDING RAFTERS, BEAMS AND RIDGE BEAMS MARKED GALV. LINTELS TO ENGINEERS DESIGN

PRE-FABRICATED WALLS NOTE

ALL TIMBER WALLS TO BE PRE-FABRICATED, ALL WALL MEMBERS TO BE DESIGNED BY TRUSS/ WALL MANUFACTURER, (INCL. TOP PLATES, BOTTOM PLATES, COMMON STUDS, OPENING STUDS & LINTLES)

BRACING NOTE

ALL WALL BRACING TO BE DESIGNED BY TRUSS / WALL MANUFACTURER OR BY ENGINEER

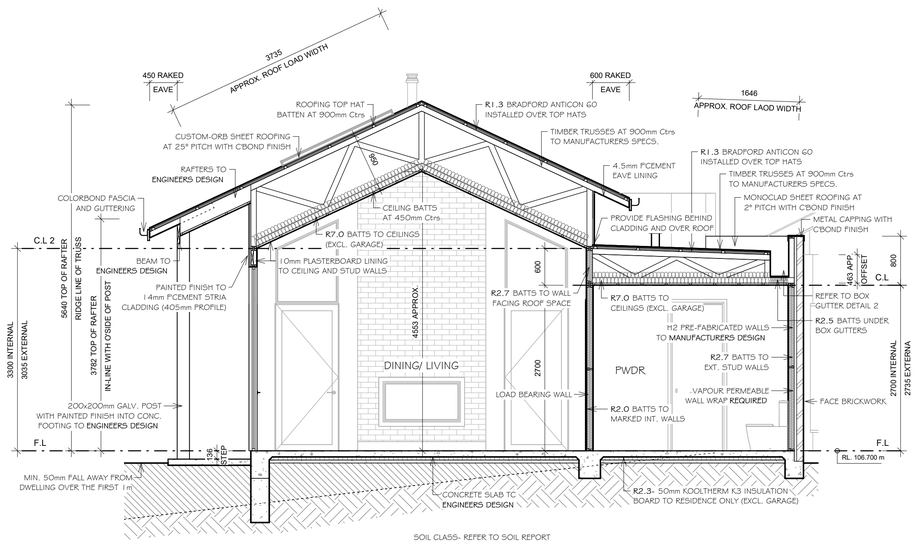

SECTION A

1 : 50

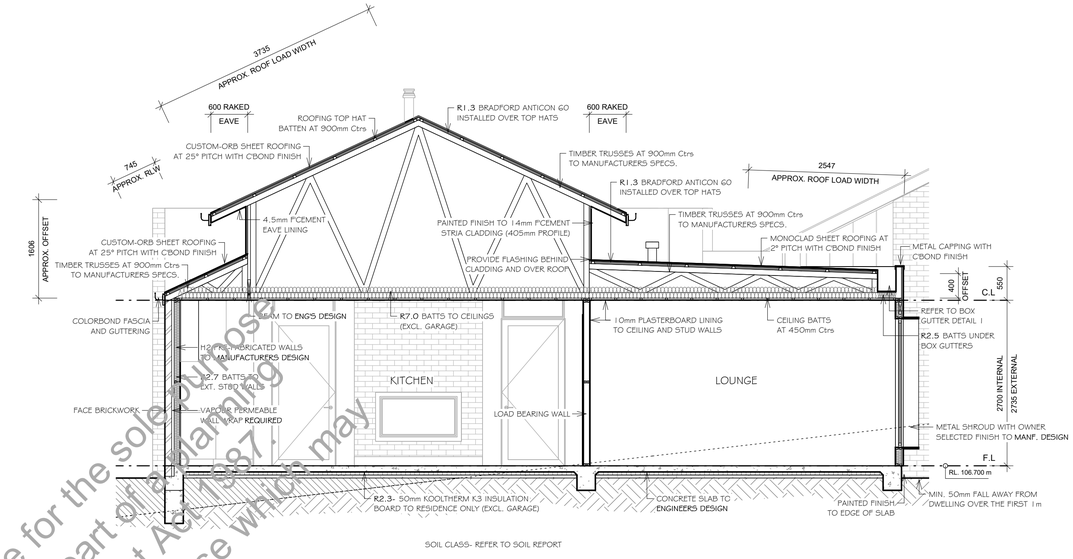

SECTION B

1 : 50

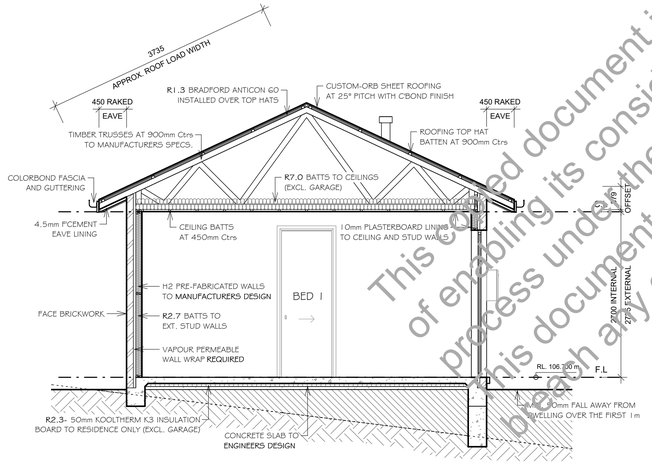

SECTION C

1 : 50

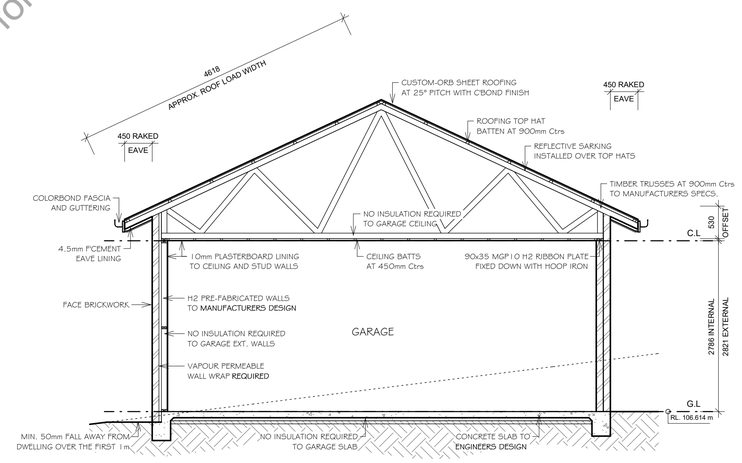

SECTION D

1 : 50

This copied document is made available for the sole purpose of enabling its consideration & review as part of a planning process under the Planning and Environment Act 1987. The document must not be used for any purpose which may breach any copyright.

INSULATION SCHEDULE
ROOF - METAL ROOF - REFLECTIVE SARKING
CEILING - PLASTERBOARD LINING - R7.0 BATTS (EXCL. GARAGE)
CEILING - PLASTERBOARD LINING - R2.5 BATTS UNDER BOX GUTTERS
EXTERNAL WALLS - BVENEER, FCEMENT - R2.7 BATTS (EXCL. GARAGE)
EXTERNAL WALLS - DOUBLE BRICK - R1.8 KB CAVITY BOARD
INTERNAL WALLS - PLASTERBOARD LINING - R2.0 BATTS (REFER TO FLOOR PLAN)
R2.7 BATTS TO WALLS FACING ROOF SPACE
INTERMEDIATE FLOOR - N/A
SUB-FLOOR - N/A
CONCRETE SLAB - R2.3 50MM KOOLTHERM K3 INSULATION BOARD

GALVANISED ANGLE LINTEL SPAN TABLE (NON-LOADBEARING BRICKWORK ONLY)
100x100x 6.0mm - MAX. SPAN 2700mm (MAX 9 BRICKS ABOVE)
100x100x 8.0mm - MAX. SPAN 3000mm (MAX 8 BRICKS ABOVE)
150x100x 6.0mm - MAX. SPAN 4200mm (MAX 7 BRICKS ABOVE)
150x100x 8.0mm - MAX. SPAN 4500mm (MAX 7 BRICKS ABOVE)
SIZES SOURCED FROM ONE STEEL TUARAGAL ULTRA ' SPAN TABLES
MINIMUM 3 COURSES OF BRICKWORK TO BE SUPPORTED BY LINTEL
IF ANY SIZES EXCEED THIS CHART REFER TO MANUFACTUERR OR ENGINEER

PENNO DRAFTING & DESIGN
33 BREEN STREET BENDIGO, Ph: (03)54443315, CDP-AD 57597

Design Matters National — The peak body for the building design profession — Member

© COPYRIGHT

DO NOT SCALE DRAWINGS

PROJECT CLIENT: AMY AND GLENN TURNBULL

PROJECT ADDRESS: LOT 38 DARLING COURT, WANDONG

REFERENCE No:	R21-220
ISSUE NUMBER:	REV-6
DATE:	26/08/2022
DRAWN BY:	B.M
CHECKED BY:	G.P

DRAWING: SECTIONS

SCALE: 1 : 50 (A1 SHEET) | SHEET No.: 06

7 NATIONWIDE HOUSE ENERGY RATING 98.8 PASS www.nathers.gov.au
TDMSIQWZPO 23 Mar 2022
Assessor GRANT PENNO
Accreditation No. DMN/10/0312
Address LOT 38 DARLING COURT WANDONG VIC 3758
https://www.fs5.com.au/QRCode/Loading?hasUser=true&QRCode=TDMSIQWZPO

CONSTRUCTION PLANS

BUSHFIRE ATTACK LEVEL - *12.5*

WIND CLASS (WIND SPEED RATING) - N3 (41 m/s)

BUILDING PERMIT APPROVAL REQUIRED BEFORE ORDERING MATERIALS

ALL DIMENSIONS TO BE CHECKED AND CONFIRMED ON SITE BY BUILDER DO NOT SCALE DRAWINGS

ALL PRIMARY TIMBER BUILDING ELEMENTS TO BE TREATED IN ACCORDANCE WITH AS 1684

TERMITE MANAGEMENT IN ACCORDANCE WITH AS 3660.1

ENGINEERING NOTE

CONCRETE SLAB AND FOOTINGS TO **ENGINEERS DESIGN**

ALFRESCO AND PORTICO ROOFS TO TO **ENGINEERS DESIGN**, INCLUDING RAFTERS, BEAMS AND RIDGE BEAMS MARKED GALV. LINTELS TO **ENGINEERS DESIGN**

PRE-FABRICATED WALLS NOTE

ALL TIMBER WALLS TO BE PRE-FABRICATED. ALL WALL MEMBERS TO BE DESIGNED BY TRUSS/ WALL MANUFACTURER. (INCL. TOP PLATES, BOTTOM PLATES, COMMON STUDS, OPENING STUDS & LINTLES)

BRACING NOTE

ALL WALL BRACING TO BE DESIGNED BY TRUSS / WALL MANUFACTURER OR BY ENGINEER

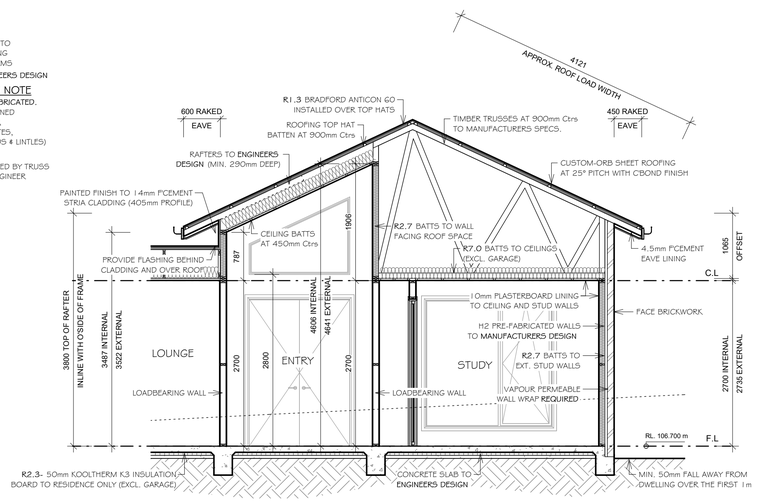

SECTION E

1 : 50

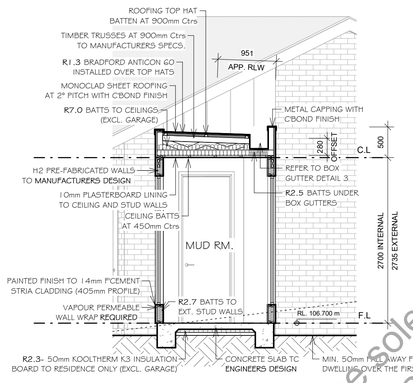

SECTION F

1 : 50

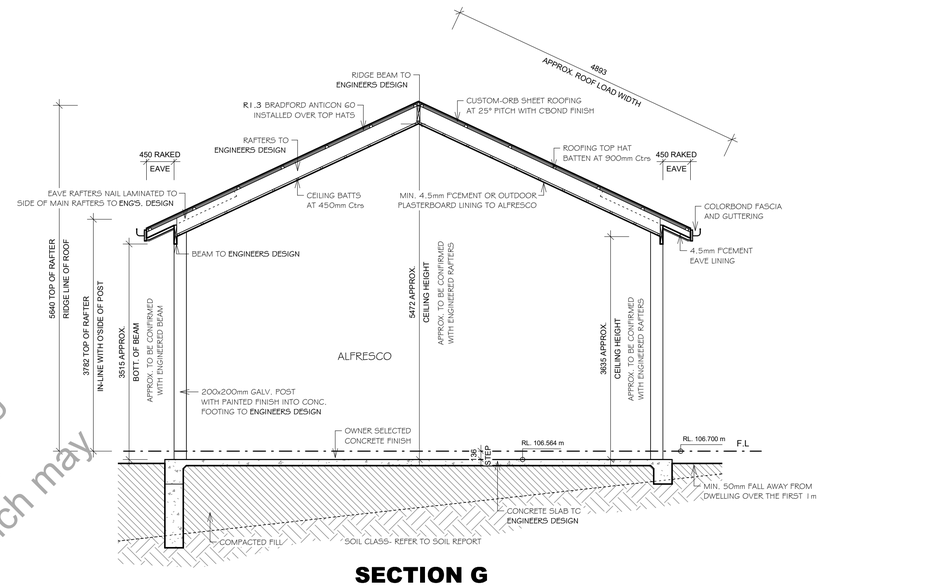

SECTION G

1 : 50

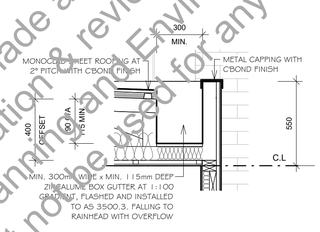

B'GUTTER DETAIL 1

1 : 20

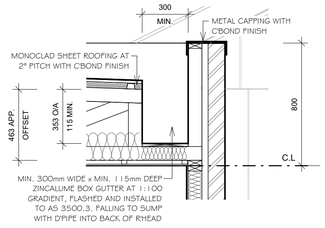

B'GUTTER DETAIL 2

1 : 20

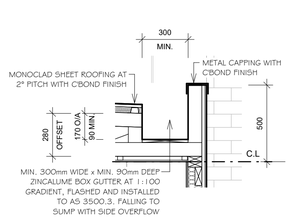

B'GUTTER DETAIL 3

1 : 20

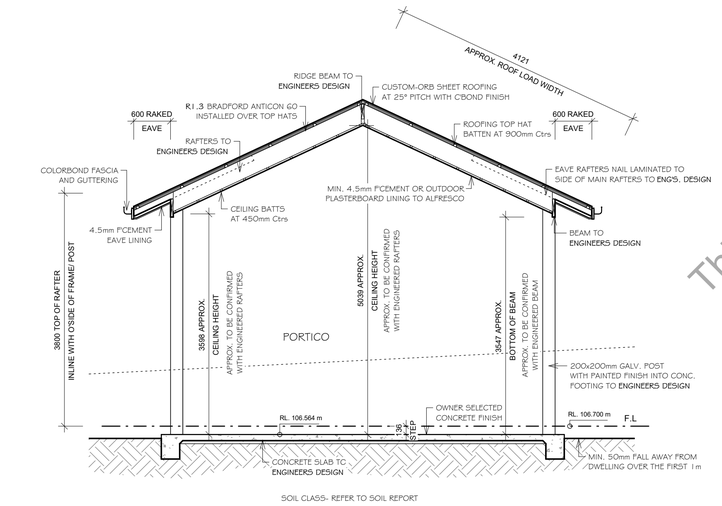

SECTION H

1 : 50

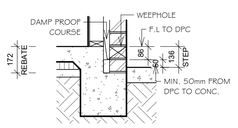

STEP DOWN DETAIL

1 : 20

FOR ILLUSTRATIVE PURPOSES ONLY
REFER TO AS 3500.3 SECTION 3 FIGURE 3.7 FOR DETAILS

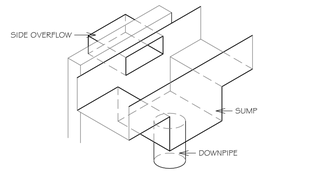

SUMP & SIDE OVERFLOW

NOT TO SCALE

INSULATION SCHEDULE
ROOF - METAL ROOF - REFLECTIVE SARKING
CEILING - PLASTERBOARD LINING - **R7.0** BATTS (EXCL. GARAGE) CEILING - PLASTERBOARD LINING - **R2.5** BATTS UNDER BOX GUTTERS
EXTERNAL WALLS - BVENEER, FCEMENT - **R2.7** BATTS (EXCL. GARAGE) EXTERNAL WALLS - DOUBLE BRICK - **R1.0** 1/2 CAVITY BOARD
INTERNAL WALLS - PLASTERBOARD LINING - **R2.0** BATTS (REFER TO FLOOR PLAN) **R2.7** BATTS TO WALLS FACING ROOF SPACE
INTERMEDIATE FLOOR - N/A SUB-FLOOR - N/A
CONCRETE SLAB - **R2.3** 50MM KOOLTHERM K3 INSULATION BOARD

GALVANISED ANGLE LINTEL SPAN TABLE (NON-LOADBEARING BRICKWORK ONLY)
100x100x 6.0mm - MAX. SPAN 2700mm (MAX 9 BRICKS ABOVE)
100x100x 8.0mm - MAX. SPAN 3000mm (MAX 8 BRICKS ABOVE)
150x100x 6.0mm - MAX. SPAN 4200mm (MAX 7 BRICKS ABOVE)
150x100x 8.0mm - MAX. SPAN 4500mm (MAX 7 BRICKS ABOVE)
SIZES SOURCED FROM ONE STEEL DUARGAL ULTRA ' SPAN TABLES MINIMUM 3 COURSES OF BRICKWORK TO BE SUPPORTED BY LINTEL IF ANY SIZES EXCEED THIS CHART REFER TO MANUFACTURER OR ENGINEER

This copied document is made available for the sole purpose of enabling its consideration & review as part of a planning process under the Planning and Environment Act 1987. This document must not be used for any purpose which may breach any copyright.

PENNO DRAFTING & DESIGN
33 BREEN STREET BENDIGO, Ph: (03)54443315, CDP-AD 57597

Design Matters National
The peak body for the building design profession
Member

© COPYRIGHT

DO NOT SCALE DRAWINGS

PROJECT CLIENT: AMY AND GLENN TURNBULL

PROJECT ADDRESS: LOT 38 DARLING COURT, WANDONG

REFERENCE No:	R21-220
ISSUE NUMBER:	REV-6
DATE:	26/08/2022
DRAWN BY:	B.M
CHECKED BY:	G.P

DRAWING: SECTIONS & DETAILS

SCALE: As indicated (A1 SHEET) | SHEET No.: 07

7 NATIONWIDE HOUSE 98.8
TDMSIQWZPO 23 Mar 2022
Assessor GRANT PENNO
Accreditation No. DMN/10/0312
Address LOT 38 DARLING COURT WANDONG VIC 3758
https://www.hia.com.au/GRCode/Landing?Publication=TDM&QWZPO

CONSTRUCTION PLANS

BUILDING PERMIT APPROVAL REQUIRED BEFORE ORDERING MATERIALS

MAXIMUM LAMP POWER DENSITY OF ARTIFICIAL LIGHTING IN ACCORDANCE WITH AS 3786 AND NCC VOL. 2 PART 3.12.5

SMOKE ALARMS INSTALLED IN ACCORDANCE WITH AS 3786 AND NCC VOL. 2 SECTION 3.7.2

ARTIFICIAL LIGHTING AROUND THE PERIMETER OF A BUILDING MUST BE CONTROLLED BY A DAYLIGHT SENSOR OR HAVE AN AVERAGE LIGHT SOURCE EFFICACY OF NOT LESS THAN 40 Lumens/W

LIGHTING INSTALLED IN ADDITION TO THE PROPOSED INSTALLATION MUST NOT EXCEED THE CALCULATED MAXIMUM WATTAGE AND MAY IMPACT ON CEILING INSULATION - CONFIRM WITH BUILDING SURVEYOR

ELECTRICAL PLAN TO BE USED AS A GUIDE ONLY

ALL LIGHT POINTS WILL BE CENTRALLY LOCATED IN CEILINGS UNLESS SPECIFICALLY REQUESTED BY OTHERS - CONFIRM WITH OWNERS. THE POSITIONS OF DOWNLIGHTS WILL BE AS CLOSE AS POSSIBLE TO THE REQUESTED POSITION, HOWEVER IT IS SUBJECT TO THE POSITION OF ROOF TRUSSES AND OTHER INSTALLATIONS IN THE CEILING POINTS - CONFIRM WITH OWNER. WHERE REQUIRED, PROVIDE POWER FOR RANGEHOOD, HOT PLATES, DISHWASHER, WALL/UNDER BENCH OVEN, MICROWAVE, REFRIGERATOR, EVAPORATIVE COOLING UNIT, HEATING UNIT, GARAGE DOOR & HOT WATER SERVICE

RECESSED LIGHTS (DOWNLIGHTS ETC.)

ALL RECESSED LIGHTS (DOWNLIGHTS, ETC.) SHOWN ON THE ADJACENT PLAN HAVE BEEN INCLUDED IN THE ENERGY RATING, TO COMPLY WITH ENERGY RATING REQUIREMENTS THE DOWNLIGHTS HAVE TO BE LED LAMPS, CONSIDERED SEALED AND HAVE INSULATION ABUTTED. ANY CHANGES TO THE NUMBER OR TYPE OF DOWNLIGHTS MAY AFFECT THE ENERGY RATING AND SHOULD BE CHECKED WITH THIS OFFICE

LED RECESSED LIGHTS (DOWNLIGHTS, ETC.) MAY BE USED AS AN ALTERNATIVE TO BELOW CEILING LINE LIGHTS (BATTEN HOLDERS, ETC.) IF THE SPECIFIED RECESSED LIGHT HAS BEEN APPROVED FOR INSTALLATION WITH INSULATION OVER & ABUTTED (IC-4).

WATTAGE CALCULATIONS

CLASS 1 AREAS (MAX. 5W/m²)
AREA SIZE - 393.13m² (1965.65W ALLOWED)
TOTAL WATTAGE -1206W (61.35%)

CLASS 1 OUTDOOR AREAS (MAX. 4W/m²)
AREA SIZE - 68.53m² (274.12W ALLOWED)
TOTAL WATTAGE -193W (70.5%)

CLASS 10a AREAS (MAX. 3W/m²)
AREA SIZE - 96.69m² (290.07W ALLOWED)
TOTAL WATTAGE -80W (27.57%)

WATTAGE TABLE	QUANTITY OF LIGHTS		
	CLASS		
	1	1. OUT.	10 A
DOWNLIGHT -13 WATTS	67	11	-
FLURO. CEILING LIGHT -18 WATTS	-	-	-
PENDANT LIGHT -40 WATTS	-	-	-
TASTIC 3 IN 1 -30 WATTS	-	-	-
FLURO TUBE LIGHT -20 WATTS	-	-	4
LED TUBE LIGHT -10 WATTS	-	-	-
INT. WALL LIGHT -20 WATTS	-	-	-
EXT. WALL LIGHT SINGLE -10 WATTS	-	5	-
EXT. WALL LIGHT SGL W/ SENSOR -N/A	-	-	-
EXT. WALL LIGHT DOUBLE -20 WATTS	-	-	-
EXT. WALL LIGHT DBL W/ SENSOR -N/A	-	-	-
LED WALL LIGHT -20 WATTS	-	-	-
LED TRACK LIGHT -30 WATTS	-	-	-
LED STRIP LIGHT -8 WATTS PER 1m	-	-	-

ELECTRICAL LEGEND

- METER/ FUSE BOX
- SMOKE ALARM
- EXHAUST FAN
- DOWNLIGHT
- FLURO CEILING LIGHT
- PENDANT LIGHT
- TASTIC 3 IN 1
- FLURO. TUBE LIGHT
- LED TUBE LIGHT
- WALL LIGHT- INT.
- WALL LIGHT- EXT.
- WALL LIGHT- DBL. EXT.
- LED WALL LIGHT
- LED TRACK LIGHTING
- LED STRIP LIGHTING
- SINGLE POWER OUTLET
- DOUBLE POWER OUTLET
- LIGHT SWITCH
- TELEPHONE POINT
- DATA POINT
- TELEVISION POINT
- USB POINT
- CEILING FAN
- CEILING FAN W/ LIGHT

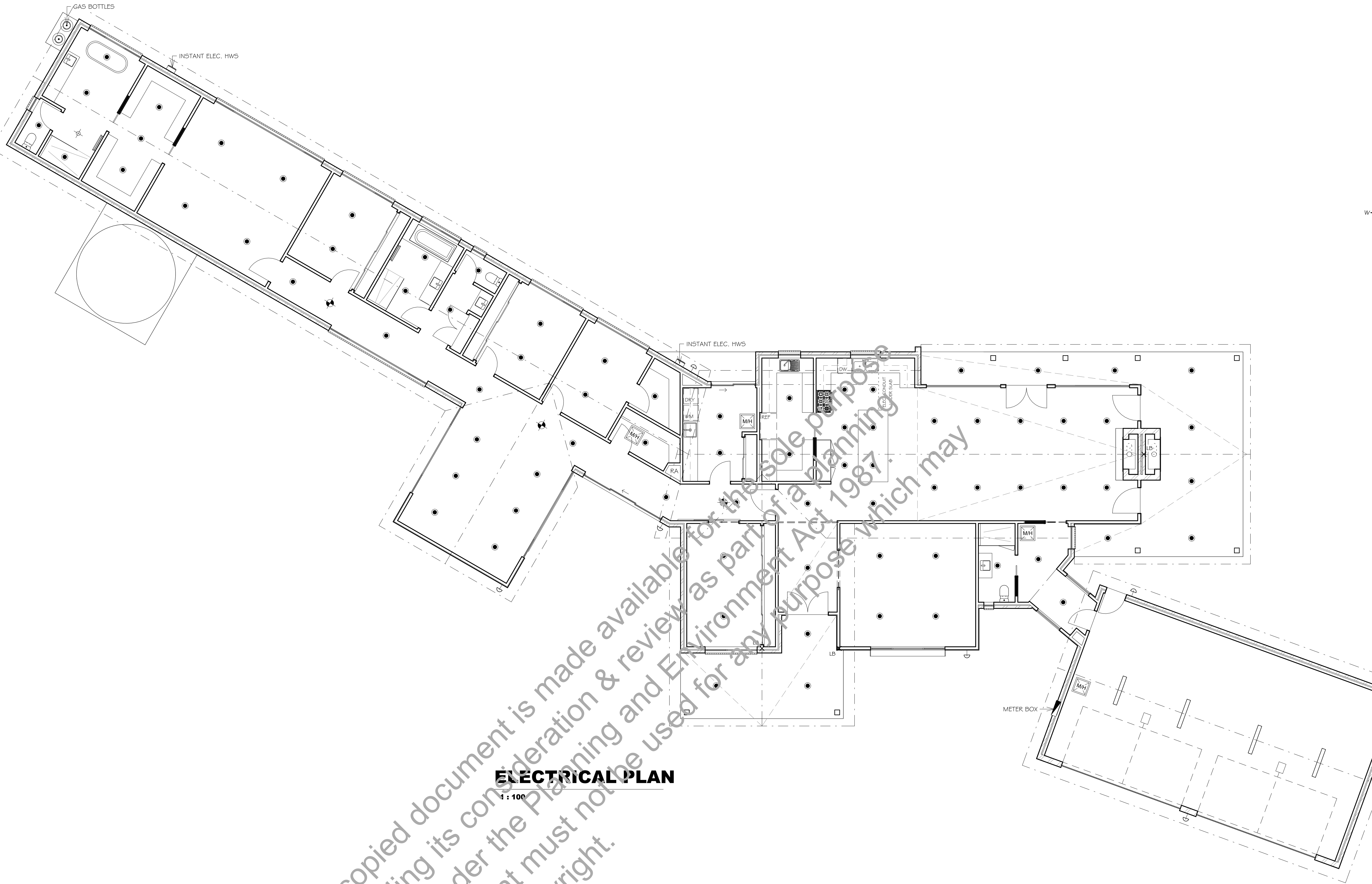

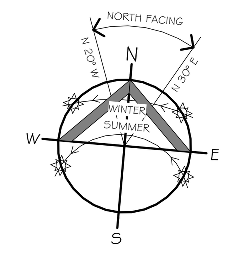

ELECTRICAL PLAN

1 : 100

This copied document is made available for the sole purpose of enabling its consideration & review as part of a planning process under the Planning and Environment Act 1987. This document must not be used for any purpose which may breach any copyright.

CONSTRUCTION PLANS

BUSHFIRE ATTACK LEVEL - *12.5*

WIND CLASS (WIND SPEED RATING) - N3 (41m/s)

BUILDING PERMIT APPROVAL REQUIRED BEFORE ORDERING MATERIALS

WINDOWS ELECTED WITH-IN THE FIRSTRATE 5 ENERGY RATING WHERE ELECTED FOR THEIR U-VALUE AND SHGC SPECIFICATIONS. USE WINDOW FRAME MATERIAL AS NOMINATED WITH-IN THESE STAMPED PLANS

ALL WINDOW & DOOR ASSEMBLIES U-VALUES MUST BE EQUAL TO OR LOWER THAN THAT SHOWN WITH IN THE THERMAL ASSESSMENT. SHGC VALUES MUST BE WITH IN +/-5% OF THAT SHOWN WITH IN THE THERMAL ASSESSMENT

THE U-VALUES AND SHGC ARE SYSTEM VALUES, MEANING COMBINATION OF GLASS AND FRAME VALUES

GLAZING THICKNESS TO BE SPECIFIED BY GLAZING/WINDOW MANUFACTURES

WINDOW SCHEDULE

TAG	LOCATION	DESCRIPTION	HEIGHT	WIDTH	GLAZING	MAX. U-VALUE	MIN. SHGC
TT 2424	ENSUITE	U-PVC FRAMED TILT N TURN WINDOW	2400	2400	DOUBLE GLAZED/ LOW E- GRADE A TOUGHENED AND TOUGHENED LAMINATED SAFETY GLAZING	1.63	0.15
TT 2450	BED 1	U-PVC FRAMED TILT N TURN WINDOW	2400	5000	DOUBLE GLAZED/ LOW E- GRADE A TOUGHENED AND TOUGHENED LAMINATED SAFETY GLAZING	1.63	0.15
TT 2424	BED 2	U-PVC FRAMED TILT N TURN WINDOW	2400	2400	DOUBLE GLAZED/ LOW E- GRADE A TOUGHENED AND TOUGHENED LAMINATED SAFETY GLAZING	1.63	0.15
TT 1818	BATH	U-PVC FRAMED TILT N TURN WINDOW	1800	1800	DOUBLE GLAZED/ LOW E- GRADE A TOUGHENED AND TOUGHENED LAMINATED SAFETY GLAZING	1.63	0.15
TT 1806	WC	U-PVC FRAMED TILT N TURN WINDOW	1800	600	DOUBLE GLAZED/ LOW E- ORDINARY ANNEALED GLAZING	1.63	0.15
TT 2424	BED 3	U-PVC FRAMED TILT N TURN WINDOW	2400	2400	DOUBLE GLAZED/ LOW E- GRADE A TOUGHENED AND TOUGHENED LAMINATED SAFETY GLAZING	1.63	0.15
TT 2424	BED 4	U-PVC FRAMED TILT N TURN WINDOW	2400	2400	DOUBLE GLAZED/ LOW E- GRADE A TOUGHENED AND TOUGHENED LAMINATED SAFETY GLAZING	1.63	0.15
TT 1509	W.I.P	U-PVC FRAMED TILT N TURN WINDOW	1500	900	DOUBLE GLAZED/ LOW E- ORDINARY ANNEALED GLAZING	1.63	0.15
TT 1512	KITCHEN	U-PVC FRAMED TILT N TURN WINDOW	1500	1200	DOUBLE GLAZED/ LOW E- ORDINARY ANNEALED GLAZING	1.63	0.15
FX 3030	DINING	U-PVC FRAMED FIXED WINDOW	3000	3000	DOUBLE GLAZED/ LOW E- GRADE A TOUGHENED AND TOUGHENED LAMINATED SAFETY GLAZING	1.48	0.39
FX 0616	DINING	U-PVC FRAMED FIXED WINDOW	600	1640	DOUBLE GLAZED/ LOW E- ORDINARY ANNEALED GLAZING	1.48	0.39
FX 3030	LIVING	U-PVC FRAMED FIXED WINDOW	3000	3000	DOUBLE GLAZED/ LOW E- GRADE A TOUGHENED AND TOUGHENED LAMINATED SAFETY GLAZING	1.48	0.39
FX 1210	LIVING	U-PVC FRAMED FIXED WINDOW	1138	1020	DOUBLE GLAZED/ LOW E- ORDINARY ANNEALED GLAZING	1.48	0.39
FX 1210	LIVING	U-PVC FRAMED FIXED WINDOW	1138	1020	DOUBLE GLAZED/ LOW E- ORDINARY ANNEALED GLAZING	1.48	0.39
TT 2409	MUD ROOM	U-PVC FRAMED TILT N TURN WINDOW	2400	900	DOUBLE GLAZED/ LOW E- GRADE A TOUGHENED AND TOUGHENED LAMINATED SAFETY GLAZING	1.63	0.15
FX 2112	MUD ROOM	U-PVC FRAMED FIXED WINDOW	2100	1200	DOUBLE GLAZED/ LOW E- GRADE A TOUGHENED AND TOUGHENED LAMINATED SAFETY GLAZING	1.48	0.39
FX 2112	MUD ROOM	U-PVC FRAMED FIXED WINDOW	2100	1200	DOUBLE GLAZED/ LOW E- GRADE A TOUGHENED AND TOUGHENED LAMINATED SAFETY GLAZING	1.48	0.39
TT 1804	POWDER	U-PVC FRAMED TILT N TURN WINDOW	1800	400	DOUBLE GLAZED/ LOW E- GRADE A TOUGHENED AND TOUGHENED LAMINATED SAFETY GLAZING	1.63	0.15
TT 2130	LOUNGE	U-PVC FRAMED TILT N TURN WINDOW	2100	3000	DOUBLE GLAZED/ LOW E- GRADE A TOUGHENED AND TOUGHENED LAMINATED SAFETY GLAZING	1.63	0.15
FX 1016	ENTRY	U-PVC FRAMED FIXED WINDOW	882	1640	DOUBLE GLAZED/ LOW E- ORDINARY ANNEALED GLAZING	1.48	0.39
TT 2121	STUDY	U-PVC FRAMED TILT N TURN WINDOW	2100	2100	DOUBLE GLAZED/ LOW E- GRADE A TOUGHENED AND TOUGHENED LAMINATED SAFETY GLAZING	1.63	0.15
TT 2440	KIDS RETREAT	U-PVC FRAMED TILT N TURN WINDOW	2400	4000	DOUBLE GLAZED/ LOW E- GRADE A TOUGHENED AND TOUGHENED LAMINATED SAFETY GLAZING	1.63	0.15
TT 2440	KIDS RETREAT	U-PVC FRAMED TILT N TURN WINDOW	2400	4000	DOUBLE GLAZED/ LOW E- GRADE A TOUGHENED AND TOUGHENED LAMINATED SAFETY GLAZING	1.63	0.15
TT 2445	PASSAGE	U-PVC FRAMED TILT N TURN WINDOW	2400	4500	DOUBLE GLAZED/ LOW E- GRADE A TOUGHENED AND TOUGHENED LAMINATED SAFETY GLAZING	1.63	0.15
TT 1806	WC 2	U-PVC FRAMED TILT N TURN WINDOW	1800	600	DOUBLE GLAZED/ LOW E- GRADE A TOUGHENED AND TOUGHENED LAMINATED SAFETY GLAZING	1.63	0.15

DOOR SCHEDULE

TAG	LOCATION	DESCRIPTION	HEIGHT	WIDTH	GLAZING	MAX U-VALUE	MIN SHGC
2418-2 SGD	L'DRY	U-PVC FRAMED SLIDING GLASS DOOR	2400	1800	DOUBLE GLAZED/ LOW E- AS PER MANUFACTURERS SPECIFICATIONS	1.72	0.20
2/820	DINING	U-PVC FRAMED FULL GLAZED DOUBLE DOORS	2400	1640	DOUBLE GLAZED/ LOW E- AS PER MANUFACTURERS SPECIFICATIONS	1.48	0.39
1020	LIVING	U-PVC FRAMED FULL GLAZED DOOR	2400	1020	DOUBLE GLAZED/ LOW E- AS PER MANUFACTURERS SPECIFICATIONS	1.48	0.39
1020	LIVING	U-PVC FRAMED FULL GLAZED DOOR	2400	1020	DOUBLE GLAZED/ LOW E- AS PER MANUFACTURERS SPECIFICATIONS	1.48	0.39
820	GARAGE	SOLID CORE TIMBER DOOR	2400	820	--	--	--
2400h x 5100w PANEL LIFT	GARAGE	SELECTED GARAGE PANEL LIFT DOOR	2400	5100	--	--	--
2400h x 5100w PANEL LIFT	GARAGE	SELECTED GARAGE PANEL LIFT DOOR	2400	5100	--	--	--
2/820	ENTRY	OWNER SELECTED ENTRY DOOR	2400	1640	--	--	--
2436-3 SGD	PASSAGE	U-PVC FRAMED SLIDING GLASS DOOR	2400	3600	DOUBLE GLAZED/ LOW E- AS PER MANUFACTURERS SPECIFICATIONS	1.72	0.20

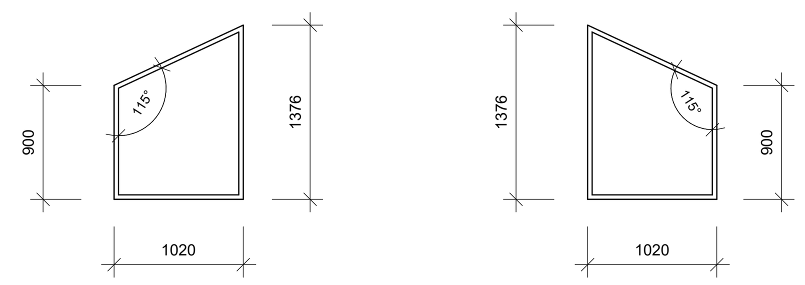

LIVING RM WINDOWS

1 : 50

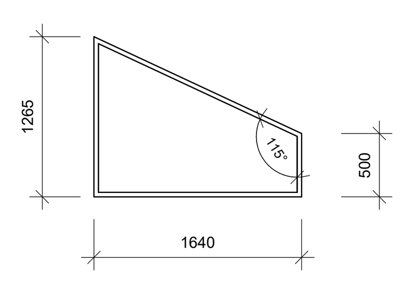

ENTRY WINDOW

1 : 50

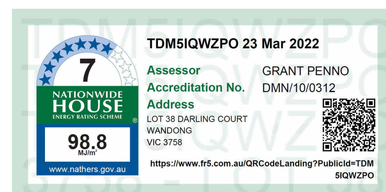

PENNO DRAFTING & DESIGN
33 BREEN STREET BENDIGO, Ph: (03)54443315, CDP-AD 57597

Design Matters National — The peak body for the building design profession — Member

© COPYRIGHT

DO NOT SCALE DRAWINGS

PROJECT CLIENT: AMY AND GLENN TURNBULL	REFERENCE No: R21-220	DRAWING: ELECTRICAL PLAN & WINDOW/ DOOR SCHEDULES	
	ISSUE NUMBER: REV-6		
PROJECT ADDRESS: LOT 38 DARLING COURT, WANDONG	DATE: 26/08/2022		
	DRAWN BY: B.M		
	CHECKED BY: G.P	SCALE: As indicated (A1 SHEET)	SHEET No.: 08

BAL-12.5 BUSHFIRE ZONE (12.5kW/m²)

CONSTRUCTION REQUIREMENTS AS PER SECTION 5 OF AS 3959 - 2018

MATERIALS, ELEMENTS OF CONSTRUCTION AND SYSTEMS MUST SATISFY THE TEST CRITERIA OF AS1530.8.1

A BUILDING ASSESSED IN SECTION 2 AS BEING BAL- 12.5, SHALL COMPLY WITH SECTION 3 AND CLAUSES 5.2 TO 5.8 OF AS 3959 - 2018

THE FOLLOWING IS GENERAL REQUIREMENTS FOR CONSTRUCTION WITHIN A BAL-12.5 BUSHFIRE ZONE, IT IS RECOMMENDED THAT THE BUILDER READ THROUGH AS 3959 IN FULL TO ENSURE FULL COMPLIANCE WITH THE STANDARD

SUBFLOOR SUPPORTS

NO CONSTRUCTION REQUIREMENTS FOR SUB-FLOOR SUPPORTS TO THE PRINCIPLE BUILDING WHERE THE SUBFLOOR SPACE IS ENCLOSED WITH-
- (a) A WALL THAT CONFORMS WITH CLAUSE 5.4; OR
- (b) A MESH OR PERFORATED STEEL SHEET MADE OF CORROSION RESISTANT STEEL, BRONZE OR ALUMINIUM MESH WITH A MAXIMUM APERTURE OF 2mm

FLOORS-

CONCRETE SLABS ON GROUND
NO CONSTRUCTION REQUIREMENTS FOR CONCRETE SLABS ON THE GROUND

ENCLOSED ELEVATED SUBFLOOR SPACE
NO CONSTRUCTION REQUIREMENTS FOR SUB-FLOOR SUPPORTS TO THE PRINCIPLE BUILDING WHERE THE SUBFLOOR SPACE IS ENCLOSED WITH-
- (a) A WALL THAT CONFORMS WITH CLAUSE 5.4; OR
- (b) A MESH OR PERFORATED SHEET MADE OF CORROSION RESISTANT STEEL, BRONZE OR ALUMINIUM WITH A MAXIMUM APERTURE OF 2mm

UNENCLOSED ELEVATED SUBFLOOR SPACE
WHERE THE SUBFLOOR SPACE IS UNENCLOSED, THE BEARERS, JOISTS AND FLOORING, LESS THAN 400mm ABOVE F.G.L SHALL BE ONE OF THE FOLLOWING:
- (a) MATERIAL THAT CONFORMS WITH THE FOLLOWING:
  - (i) BEARERS AND JOISTS SHALL BE-
    - NON COMBUSTIBLE; OR
    - BUSHFIRE RESISTING TIMBER
  - (ii) FLOORING SHALL BE-
    - NON COMBUSTIBLE; OR
    - BUSHFIRE RESISTING TIMBER; OR
    - TIMBER (OTHER THAN BUSHFIRE RESISTING), PARTICLEBOARD OR PLYWOOD FLOORING WHERE THE UNDERSIDE IS LINED WITH SARKING-TYPE MATERIAL OR MINERAL WOOL INSULATION
- (b) A SYSTEM CONFORMING WITH AS 1530.8.1

WALLS-

GENERAL
FOR AREAS OF EXTERNAL WALL'S WITHIN 400mm OF THE GROUND, DECK, ROOFS OR SIMILAR *(REFER TO CLAUSE 5.4.1 FOR FURTHER INFORMATION)*
ELEMENTS SHALL BE
- (a) NON COMBUSTIBLE MATERIAL WITH MIN. THICKNESS OF 90mm I.E FULL MASONARY, CONCRETE, EARTH WALL, OR
- (b) TIMBER LOG OF A SPECIES AS PER CLAUSE 5.4.1 (b), OR
- (c) CLADDING THAT IS FIXED EXTERNALLY TO A TIMBER OR STEEL FRAME AND IS-
  - NON COMBUSTIBLE MATERIAL, OR
  - FIBRE CEMENT A MIN. OF 6mm THICK
  - BUSHFIRE RESISTING TIMBER AS PER APPENDIX F OF AS 3959
  - TIMBER SPECIES AS PER APPENDIX E OF AS 3959

JOINTS
ALL JOINTS IN THE EXTERNAL SURFACES MATERIAL OF WALLS SHALL BE COVERED, SEALED, OVERLAPPED, BACKED OR BUTT JOINTED

VENTS AND WEEP HOLES
EXCEPT FOR EXCLUSION PROVIDED IN CLAUSE 3.6, VENTS AND WEEPHOLES IN EXTERNAL WALLS SHALL BE SCREENED WITH A MESH MADE OF CORROSION RESISTANT STEEL, BRONZE OR ALUMINIUM WITH A MAXIMUM APERTURE OF 2mm

EXTERNAL GLAZED ELEMENTS AND ASSEMBLIES AND EXTERNAL DOORS

WINDOWS AND SIDELIGHTS
TO COMPLY WITH ONE OF THE FOLLOWING
- (a) COMPLETELY PROTECTED BY A BUSHFIRE SHUTTER THAT COMPLIES WITH CLAUSE 3.7 AND CLAUSE 5.5.1 OF AS 3959, OR
- (b) COMPLETELY PROTECTED EXTERNALLY BY SCREENS THAT COMPLY WITH CLAUSE 3.6 AND CLAUSE 5.5.2 OF AS 3959, OR
- (c) COMPLY WITH THE FOLLOWING
  - (i) FRAME MATERIAL FOR WINDOWS WITHIN 400mm OF A HORIZONTAL SURFACE. (*REFER TO CLAUSE 5.5.3 (c), (i) FOR FURTHER INFORMATION)* WINDOW FRAMES AND JOINERY SHALL BE MADE FROM
    - BUSHFIRE RESISTING TIMBER, OR
    - TIMBER SPECIES FROM APPENDIX E OF AS 3959, OR
    - METAL, OR
    - METAL REINFORCED uPVC
  - (ii) HARDWARE HAS NO SPECIFIC RESTRICTIONS
  - (iii) WHERE GLAZING IS WITHIN 400mm OF A HORIZONTAL SURFACE. *(REFER TO CLAUSE 5.5.3 (c), (iii) FOR FURTHER INFORMATION)* GLAZING SHALL BE GRADE A SAFETY GLASS MINIMUM 4mm THICKNESS OR GLASS BLOCKS. FOR ALL OTHER GLAZING, ANNEALED GLASS MAY BE USED
  - (iv) SEALS AND WEATHER STRIPS HAVE NO SPECIFIC REQUIREMENTS
  - (v) OPENING PORTIONS OF WINDOWS SHALL BE SCREENED WITH SCREENS THAT COMPLY WITH CLAUSE 3.6 OR CLAUSE 5.5.2 INTERNALLY OR EXTERNALLY

DOORS- SIDE HUNG EXTERNAL
TO COMPLY WITH ONE OF THE FOLLOWING
- (a) COMPLETELY PROTECTED BY A BUSHFIRE SHUTTER THAT COMPLIES WITH CLAUSE 3.7 AND CLAUSE 5.5.1 OF AS 3959, OR
- (b) COMPLETELY PROTECTED EXTERNALLY BY SCREENS THAT COMPLY WITH CLAUSE 3.6 AND CLAUSE 5.5.2 OF AS 3959, OR
- (c) COMPLY WITH THE FOLLOWING
  - (i) DOOR PANEL MATERIAL SHALL BE;
    - NON COMBUSTIBLE, OR
    - SOLID TIMBER WITH MIN. THICKNESS OF 35mm FOR THE BOTTOM 400mm, OR
    - FULL FRAMED GLASS DOOR WHERE FRAMES ARE MADE FROM METAL, BUSHFIRE RESISTING TIMBER OR uPVC
    - REFER TO AS 3959 FOR FURTHER OPTIONS
  - (ii) DOOR FRAME MATERIAL SHALL BE-
    - BUSHFIRE RESISTING TIMBER
    - TIMBER SPECIES FROM APPENDIX E OF AS 3959, OR
    - METAL, OR
    - METAL REINFORCED PVC-U
  - (iii) HARDWARE HAS NO SPECIFIC RESTRICTIONS
  - (iv) GLAZING SHALL BE MIN. 4mm GRADE A SAFETY GLAZING OR GLASS BLOCKS
  - (v) WEATHER STRIPS, DRAFT EXCLUDERS OR DRAFT SEALS SHALL BE INSTALLED
  - (vi) THERE IS NO REQUIREMENTS TO SCREEN THE OPENING PART OF THE DOOR
  - (iv) DOORS SHALL BE TIGHT FITTING TO THE DOOR FRAME OR ABUTTING DOOR

DOORS- SLIDING DOORS
SLIDING DOORS SHALL-
- (a) COMPLETELY PROTECTED BY A BUSHFIRE SHUTTER THAT COMPLIES WITH CLAUSE 3.7 AND CLAUSE 5.5.1 OF AS 3959, OR
- (b) COMPLETELY PROTECTED EXTERNALLY BY SCREENS THAT COMPLY WITH CLAUSE 3.6 AND CLAUSE 5.5.2 OF AS 3959, OR
- (c) COMPLY WITH THE FOLLOWING
  - (i) FRAME MATERIAL (INCLUDING FULL FRAMED GLAZED DOORS)
    - BUSHFIRE RESISTING MATERIAL (APPENDIX F); OR
    - TIMBER SPECIES FROM APPENDIX E OF AS 3959, OR
    - METAL, OR
    - METAL REINFORCED uPVC
  - (ii) HARDWARE HAS NO SPECIFIC REQUIREMENTS
  - (iii) GLAZING SHALL BE MIN. 4mm GRADE A SAFETY GLAZING OR GLASS BLOCKS
  - (iv) SEALS AND WEATHER STRIPS HAVE NO SPECIFIC REQUIREMENTS
  - (vi) THERE IS NO REQUIREMENTS TO SCREEN THE OPENING PART OF THE DOOR
  - (iv) SLIDING PANELS SHALL BE TIGHT FITTING TO THE DOOR FRAME

DOORS- VEHICLE ACCESS DOORS (GARAGE DOORS)
TO COMPLY WITH THE FOLLOWING
- (a) THE PORTION OF THE DOOR WITHIN 400mm OF THE GROUND MUST BE MADE FROM EITHER OF THE FOLLOWING
  - NON COMBUSTIBLE MATERIAL, OR
  - BUSHFIRE RESISTING TIMBER, OR
  - FIBRE-CEMENT SHEET, MIN. 6mm THICK, OR
  - TIMBER SPECIES AS PER APPENDIX E OF AS 3959
- (b) ACCESS DOORS SHALL BE PROTECTED WITH SUITABLE WEATHER STRIPS, DRAUGHT EXCLUDERS, DRAFT SEALS OR BRUSHES, ASSEMBLIES FITTED WITH GUIDE TRACKS DO NOT NEED EDGE GAP PROTECTION
- (C) ACCESS DOORS FITTED WITH VENTILATION SLOTS SHALL BE PROTECTED IN ACCORDANCE WITH CLAUSE 3.6

ROOFS- INCLUDING PENETRATIONS, EAVES, FASCIAS AND GABLES, AND GUTTERS AND DOWNPIPES)

GENERAL
THE FOLLOWING APPLY TO ALL TYPES OF ROOFS
- (a) TILES, SHEET ROOFING AND ACCESSORIES SHALL BE NON-COMBUSTIBLE
- (b) ROOF/ ROOF AND ROOF/ WALL JUNCTIONS SHALL BE SEALED OR PROTECTED IN ACCORDANCE WITH CLAUSE 3.6
- (c) ROOF OPENINGS (GABLE END VENT, ROOF VENTS) SHALL BE FITTED WITH EMBER GUARDS MADE OF A NON COMBUSTIBLE MATERIAL OR A CORROSION-RESISTANT STEEL, BRONZE OR ALUMINIUM MESH WITH A MAXIMUM 2mm APERTURE
- (d) INSTALLATION OF EVAPORATIVE COOLERS IN ACCORDANCE WITH CLAUSE 5.6 (d)

TILES ROOF
TILE ROOFS SHALL BE FULLY SARKED- SARKING SHALL-
- (a) BE LOCATED ON TOP OF ROOF FRAME- EXCEPT THE ROOF BATTENS
- (b) COVER ENTIRE ROOF, INCLUDING RIDGE AND HIPS
- (c) EXTEND INTO GUTTERS AND VALLEYS

SHEET ROOF
SHEET ROOFS SHALL-
- (a) BE FULLY SARKED AS ABOVE, EXCEPT THAT FOIL BACKED INSULATION BLANKETS MAY BE INSTALLED OVER BATTENS
- (b) HAVE ANY GAPS SEALED AT THE FASCIA OR WALL LINE, HIPS AND RIDGES BY-
  - (i) A CORROSION RESISTANT STEEL, BRONZE OR ALUMINIUM MESH WITH A MAXIMUM 2mm APERTURE
  - (ii) MINERAL WOOL, OR
  - (iii) NON COMBUSTIBLE MATERIAL

VERANDAH, CARPORT AND AWNING ROOFS
- (a) A ROOF FORMING PART OF THE MAIN ROOF SPACE MUST COMPLY WITH THE ABOVE REQUIREMENTS FOR THE MAIN ROOF
- (b) A ROOF SEPARATED FROM THE MAIN ROOF SPACE BY AN EXTERNAL WALL COMPLYING WITH CLAUSE 5.4 OF AS 3959 SHALL HAVE NON COMBUSTIBLE ROOFING EXCEPT WHERE TRANSLUCENT OR TRANSPARENT MATERIAL IS USED

* THERE IS NO REQUIREMENTS TO LINE THE UNDERSIDE OF A ROOF SEPARATE FROM THE MAIN ROOF SPACE

ROOF PENETRATIONS
- (a) ALL ROOF PENETRATIONS (WITH NO EXCEPTIONS) SHALL BE SEALED AT THE ROOF WITH A NON COMBUSTIBLE MATERIAL
- (b) OPENINGS IN VENTS, VENTED ROOF LIGHTS (OR SIMILAR) SHALL BE FITTED WITH A MESH MADE OF CORROSION RESISTANT STEEL, BRONZE OR ALUMINIUM WITH A MAXIMUM 2mm APERTURE
  *THIS REQUIREMENT DOES NOT APPLY TO ROOM SEALED GAS APPLIANCES
  *IN THE CASE OF GAS APPLIANCE FLUES, EMBER GUARDS SHALL NOT BE FITTED
- (c) ALL OVERHEAD GLAZING SHALL BE GRADE A SAFETY GLASS COMPLYING WITH AS 1288
- (d) FOR POLYMER COVERINGS ON SKYLIGHTS AND ROOF LIGHTS REFER TO CLAUSE 5.6.5 (d) OF AS 3959
- (e) FOR FLASHING AROUND TUBULAR SKYLIGHTS REFER TO CLAUSE 5.6.5 (e) OF AS 3959
- (f) FOR EVAPORATIVE COOLERS REFER TO CLAUSE 5.6.5 (e) OF AS 3959
- (g) VENT PIPES MADE FROM PVC ARE PERMITTED
- (h) EAVE LIGHTING SHALL BE ADEQUATELY SEALED

EAVE LININGS, FASCIA AND GABLES
- (a) GABLES SHALL COMPLY WITH CLAUSE 5.4 OF AS 3959
- (b) EAVE PENETRATIONS SHALL BE PROTECTED AS PER ROOF PENETRATIONS
- (c) EAVE VENTILATION OPENINGS SHALL BE FITTED WITH EMBER GUARDS MADE FROM CORROSION RESISTANT STEEL, BRONZE OR ALUMINIUM WITH A MAXIMUM 2mm APERTURE
  * JOINTS IN EAVE LININGS, FASCIA AND GABLES MAY BE SEALED WITH PLASTIC JOINING STRIPS OR TIMBER STORM MOULDS

NO CONSTRUCTION REQUIREMENTS FOR FASCIAS, BARGEBOARDS AND EAVE LININGS

GUTTERS AND DOWNPIPES
AS 3959 DOES NOT PROVIDE MATERIAL REQUIREMENTS FOR GUTTERS AND DOWNPIPES WITH THE EXCEPTION OF BOX GUTTERS
- (a) BOX GUTTERS SHALL BE NON COMBUSTIBLE AND FLASHED AT THE JUNCTION WITH THE ROOF WITH NON COMBUSTIBLE MATERIAL

*IF GUTTER AND VALLEY LEAF GUARDS ARE INSTALLED THEY SHALL BE NON COMBUSTIBLE

VERANDAHS, DECKS, STEPS AND LANDINGS

DECKING MAY BE SPACED

THERE IS NO REQUIREMENT TO ENCLOSE THE SUB-FLOOR SPACE OF VERANDAHS, DECKS, STEPS, RAMPS OR LANDINGS

ENCLOSED SUB-FLOOR SPACES OF VERANDAHS, DECKS, STEPS, RAMPS AND LANDS.
MATERIALS THAT ARE USED TO ENCLOSE A SUB-FLOOR SPACE THAT ARE WITHIN 400mm OF THE GROUND SHALL COMPLY WITH CLAUSE 5.4 OF AS 3959

THERE ARE NO CONSTRUCTION REQUIREMENTS FOR SUPPORT POSTS, COLUMNS, STUMPS, STRINGERS, PIERS, POLES, DECKS, RAMPS OR LANDINGS (I.E BEARERS AND JOISTS)

DECKING, TREADS AND SURFACES OF RAMPS AND LANDINGS THAT ARE LESS THAN 300mm (HORIZONTALLY) FROM GLAZED ELEMENTS THAT ARE LESS THE 400mm (VERTICALLY) FROM THE SURFACE OF THE DECK SHALL BE MADE FROM
- (a) NON COMBUSTIBLE MATERIAL, OR
- (b) BUSHFIRE RESISTING TIMBER, OR
- (c) TIMBER SPECIES IN APPENDIX E OF AS 3959, OR
- (d) uPVC

UNENCLOSED SUB-FLOOR SPACES VERANDAHS, DECKS, STEPS, RAMPS AND LANDS.
THERE ARE NO CONSTRUCTION REQUIREMENTS FOR SUPPORT POSTS, COLUMNS, STUMPS, STRINGERS, PIERS, POLES, DECKS, RAMPS OR LANDINGS (I.E BEARERS AND JOISTS)

DECKING, TREADS AND SURFACES OF RAMPS AND LANDINGS THAT ARE LESS THAN 300mm (HORIZONTALLY) FROM GLAZED ELEMENTS THAT ARE LESS THE 400mm (VERTICALLY) FROM THE SURFACE OF THE DECK SHALL BE MADE FROM
- (a) NON COMBUSTIBLE MATERIAL, OR
- (b) BUSHFIRE RESISTING TIMBER, OR
- (c) TIMBER SPECIES IN APPENDIX E OF AS 3959

BALUSTRADING, HANDRAILS OR OTHER BARRIERS
THERE IS NO CONSTRUCTION REQUIREMENTS

VERANDAH POSTS
VERANDAH POSTS SHALL BE:
- (a) TIMBER POSTS SHALL BE MOUNTED ON A GALVANIZED STIRRUPS WITH A MIN. CLEARANCE OF 75mm ABOVE THE F.G.L OR,
- (b) IF LESS THAN 400mm FROM THE SURFACE OF A DECK OR GROUND SHALL BE;
  - (i) NON-COMBUSTIBLE MATERIAL; OR
  - (ii) BUSHFIRE RESISTING TIMBER (APPENDIX F): OR
  - (iii) TIMBER SPECIES AS PER PARAGRAPH E1, APPENDIX E

WATER AND GAS SUPPLY PIPES

ABOVE GROUND, EXPOSED WATER PIPES SHALL BE METAL
GAS PIPES AND FITTINGS REFER TO CLAUSE 5.8

This copied document is made available for the sole purpose
of enabling its consideration & review as part of a planning
process under the Planning and Environment Act 1987.
This document must not be used for any purpose which may
breach any copyright.

GENERAL NOTES

ALL BUILDING AND WORK PRACTICES, METHODS AND MATERIALS SHALL COMPLY WITH, BUT NOT LIMITED TO, THE CURRENT VERSIONS OF THE BUILDING REGULATIONS, NATIONAL CONSTRUCTION CODE SERIES AND ALL RELEVANT AUSTRALIAN STANDARDS (AS AMENDED).

DO NOT SCALE DRAWINGS. USE WRITTEN DIMENSIONS ONLY.

ALL MEASUREMENTS ARE IN MILLIMETERS UNLESS NOTIFIED OTHERWISE, FIGURE DIMENSIONS TO TAKE PRECEDENCE OVER SCALE

ALL MATERIALS AND CONSTRUCTION PRACTICE SHALL MEET THE PERFORMANCE REQUIREMENTS OF THE BUILDING CODE OF AUSTRALIA. WHERE AN ALTERNATIVE SOLUTION IS PROPOSED THEN PRIOR TO IMPLEMENTATION OR INSTALLATION IT FIRST MUST BE ASSESSED AND APPROVED BY THE RELEVANT BUILDING SURVEYOR AS MEETING THE PERFORMANCE REQUIREMENTS OF THE BUILDING CODE OF AUSTRALIA.

THE BUILDER AND SUBCONTRACTORS SHALL CHECK AND VERIFY ALL DIMENSIONS, SETBACKS, LEVELS, SPECIFICATIONS AND ALL OTHER RELEVANT DOCUMENTATION PRIOR TO THE COMMENCEMENT OF ANY WORKS. REPORT ALL DISCREPANCIES TO THIS OFFICE FOR CLARIFICATION.

THIS PLAN IS THE PROPERTY OF PENNO DRAFTING & DESIGN AND IS SUBJECT TOCOPYRIGHT. IT IS NOT TO BE COPIED OR VARIED IN WHOLE OR IN ANY PART WITHOUT WRITTEN CONSENT

THESE DRAWINGS SHALL BE READ IN CONJUNCTION WITH ALL RELEVANT STRUCTURAL ENGINEER, CIVIL ENGINEER AND ALL OTHER CONSULTANTS DRAWINGS/DETAILS AND WITH ANY OTHER WRITTEN INSTRUCTIONS ISSUED IN THE COURSE OF THE CONTRACT

THESE DRAWINGS SHALL BE READ IN CONJUNCTION WITH AND CONSTRUCTED IN ACCORDANCE WITH THE THERMAL ASSESSMENT REPORT AND/OR ANY NCC DEEMED TO SATISFY REPORT

PENNO DRAFTING AND DESIGN IS NOT LIABLE FOR ANY MISTAKES/ ISSUES OR MISUNDERSTANDINGS DUE TO EXCESSIVE PHOTOCOPYING OR MISHANDLING OF THESE PLANS

DESIGN GUST WIND SPEED/WIND CLASSIFICATION TO BE CALCULATED IN ACCORDANCE WITH AS 4055 & AS/NZS 1170.2 (SUBJECT TO CONFIRMATION ON SITE BY RELEVANT BUILDING SURVEYOR AT FIRST INSPECTION)

VERIFY ALL EXISTING ELECTRICAL (POWER), TELECOMMUNICATIONS, GAS, WATER, STORMWATER AND SEWER MAINS/ PIT POSITIONS PRIOR TO ANY EXCAVATIONS.

TREES OR LARGE SHRUBS ON THE BUILDING SITE SHOULD BE REMOVED AND THE GROUND FLOODED 2 TO 3 MONTHS PRIOR TO CONSTRUCTING THE FOOTINGS OR ADDITIONAL FOOTINGS WILL BE REQUIRED

REMOVAL OF EXISTING STRUCTURES OR VEGETATION THAT DISTURBS THE SOIL PROFILE AT THE RECOMMENDED FOUNDATION DEPTH WILL REQUIRE INCREASED FOOTINGS. CONFIRM WITH ENGINEER

THE BUILDER AND SUBCONTRACTOR SHALL ENSURE THAT ALL STORMWATER DRAINS, SEWER PIPES AND THE LIKE ARE LOCATED AT A SUFFICIENT DISTANCE FROM ANY BUILDINGS FOOTINGS AND/OR SLAB EDGE BEAMS SO AS TO PREVENT GENERAL MOISTURE PENETRATION, DAMPNESS, WEAKENING AND UNDERMINING OF ANY BUILDING AND ITS FOOTING SYSTEM

EXCAVATIONS- NEAR THE BUILDING SHALL BE BACKFILLED TO PREVENT ACCESS OF WATER TO THE FOUNDATIONS

FOR ALL SITE EXCAVATIONS REFER TO NCC VOLUME 2 PART 3.1 AND THE BUILDING REGULATIONS

SITE EXCAVATIONS MUST NOT BE UNDERTAKEN WITHIN EASEMENTS AND/OR WITHIN THE VICINITY OF UNDERGROUND PIPES AND SERVICES WITHOUT THE PRIOR WRITTEN CONSENT FROM THE RESPONSIBLE/ RELEVANT AUTHORITY

INSTALLATION OF ALL SERVICES SHALL COMPLY WITH THE RESPECTIVE SUPPLY AUTHORITY REQUIREMENTS.

FOR MULTI DWELLING DEVELOPMENTS REFER TO CIVIL ENGINEERS DESIGN & DETAILS FOR ALL STORM WATER, CAR PARKING, FINISHED SURFACE LEVELS AND DRIVEWAY CONSTRUCTION REQUIREMENTS

SURFACE DRAINAGE SHALL BE PROVIDED IN ACCORDANCE WITH NCC VOLUME TWO CLAUSE 3.1.2.3
THE EXTERNAL FINISHED SURFACE SURROUNDING THE SLAB MUST BE DRAINED TO MOVE SURFACE WATER AWAY FROM THE BUILDING AND GRADED TO GIVE A SLOPE OF NOT LESS THAN 50mm OVER THE FIRST 1m
MINIMUM FINISHED SLAB HEIGHTS
(i) 100 MM ABOVE THE FINISHED GROUND LEVEL IN *LOW RAINFALL INTENSITY AREAS* OR SANDY, WELL-DRAINED AREAS; OR
(ii) 50 MM ABOVE IMPERMEABLE (PAVED OR CONCRETED AREAS) THAT SLOPE AWAY FROM THE BUILDING IN ACCORDANCE WITH THE ABOVE; OR
(iii) 150 MM IN ANY OTHER CASE.

THE ENTIRE STORMWATER SYSTEM INCLUDING BUT NOT LIMITED TO GUTTER, DOWNPIPES, RAINHEAD AND STORMWATER PIPES TO BE IN ACCORDANCE WITH AS/NZS 3500.3

ALL STORM WATER PIPES SHALL BE A MINIMUM 90mm CLASS 6 U/PVC MATERIAL. PIPES SHOULD BE LAID WITH AN EVEN FALL TO LEGAL POINT OF DISCHARGE AS DIRECTED BY THE RESPONSIBLE AUTHORITY.
INSPECTION OPENINGS SHALL BE PROVIDED AT MAJOR DIRECTION CHANGES AND 9.0M (MAX) CTRS
PIPES SHALL BE LAID NO CLOSER THAN 600MM FROM BUILDING LINE
THE COVER TO 90 MM CLASS 6 U/PVC STORMWATER DRAINS INSTALLED UNDERGROUND MUST BE NOT LESS THAN—
(i) UNDER SOIL — 100MM; OR
(ii) UNDER PAVED OR CONCRETE AREAS — 50MM; OR
(iii) UNDER AREAS SUBJECT TO LIGHT VEHICLE TRAFFIC—
(a) REINFORCED CONCRETE — 75MM; OR
(b) PAVED — 100MM.
(c) WITHOUT PAVEMENT — 450MM

PROVIDE AGRICULTURAL DRAINS TO ALL SITE CUTS, BEHIND RETAINING WALLS AND BATTERS. AG DRAINS TO BE CONNECTED TO APPROVED STORMWATER SYSTEM/ LPOD VIA SILT PITS.

GUTTERS TO BE INSTALLED IN ACCORDANCE WITH NCC VOLUME TWO CLAUSE 3.5.2.4OVERFLOWS TO GUTTERS TO BE PROVIDED IN ACCORDANCE WITH NCC VOLUME TWO CLAUSE 3.5.2.4 (c)
VALLEY GUTTERS TO INSTALLED IN ACCORDANCE WITH NCC VOLUME TWO CLAUSE 3.5.2.4 (d)

DOWNPIPES IN ACCORDANCE WITH NCC VOLUME TWO CLAUSE 3.5.2.5
PROVIDE & INSTALL DOWNPIPES OF COMPATIBLE MATERIAL TO SELECTED OR EXISTING GUTTER MATERIAL. DOWNPIPES MUST NOT SERVE MORE THAN 12M OF GUTTER EACH & BE WITHIN 1.2M OF ANY VALLEY JUNCTION IN THE ROOF OR ELSE GUTTERS MUST HAVE PROVISIONS FOR OVERFLOW

IF A SEPTIC SYSTEM IS REQUIRED IT IS TO BE DESIGNED, INSTALLED AND APPROVED BY THE RESPONSIBLE AUTHORITY

ALL WET AREAS TO COMPLY WITH AS 3740 AND PART 3.8.1 OF THE NCC VOLUME TWO

SMOKE ALARMS MUST COMPLY WITH AS 3786 & BE CONNECTED TO CONSUMER MAINS POWER WHERE CONSUMER POWER IS SUPPLIED TO THE BUILDING. WHERE THERE IS MORE THAN ONE ALARM THEY MUST BE INTERCONNECTED.
REFER TO PART 3.7.2 OF THE NCC VOLUME TWO

MECHANICAL VENTILATION WHERE REQUIRED WITHIN SANITARY COMPARTMENTS, LAUNDRYS & BATHROOMS IS TO EXHAUST DIRECTLY OUTSIDE THE BUILDING BY EITHER,
- DUCTS (SHARED OR OTHERWISE); OR
- INTO THE ROOF/CEILING SPACE PROVIDED IT IS ADEQUATELY VENTILATED BY OPEN EAVES AND / OR ROOF VENTS INC. WHIRLY BIRD(S) IN ACCORDANCE WITH NCC 3.8.5.2

WHERE THE CLOSET PAN IS WITHIN 1200MM OF THE HINGE (PIVOT POINT) OF THE DOOR TO A FULLY ENCLOSED SANITARY COMPARTMENT THE DOOR MUST EITHER OPEN OUTWARDS, SLIDE OPEN OR BE READILY REMOVABLE FROM THE OUTSIDE OF THE COMPARTMENT, IE. BE FITTED WITH LIFT OFF HINGES REFER TO NCC VOLUME TWO CLAUSE 3.8.3.3

A STAIRWAY AND RAMP MUST BE DESIGNED TO TAKE LOADING FORCES IN ACCORDANCE WITH AS/NZS 1170.1

A STAIRWAY MUST HAVE -
-NOT MORE THAN 18 NOR LESS THAN 2 RISERS IN EACH FLIGHT,
-AT THE END OF EACH FLIGHT A LANDING COMPLYING WITH NCC VOLUME TWO CLAUSE 3.9.1.5
-GOINGS AND RISERS THAT ARE CONSTANT THROUGHOUT A STRAIGHT FLIGHT
-WINDERS MUST BE IN ACCORDANCE WITH NCC VOLUME TWO CLAUSE 3.9.1.2 (c)
-RISERS WHICH DO NOT HAVE ANY OPENINGS THAT WOULD ALLOW A 125mm SPHERE TO PASS THROUGH BETWEEN THE TREADS
-A SURFACE WITH A SLIP-RESISTANCE CLASSIFICATION NOT LESS THAN P3 FOR DRY SCENARIOS AND P4 FOR WET SCENARIOS AND BEEN TESTED IN ACCORDANCE WITH AS 4586
-TREADS OF SOLID CONSTRUCTION IF THE STAIRWAY IS MORE THEN 10 METERS HIGH OR CONNECTS MORE THAN THREE STOREYS

GOINGS(G) AND RISERS(R) MUST BE FOR STAIRWAYS -
-RISERS TO BE MINIMUM 115MM HIGH AND MAXIMUM 190MM HIGH
-GOINGS TO BE MINIMUM 240MM LONG AND MAXIMUM 355MM LONG
-AND HAVE A (2R+G) RELATIONSHIP BETWEEN 700 AND 550

FOR SPIRAL OR ATTIC STAIRWAYS REFER TO NCC VOLUME TWO, PART 3.9.1
FOR ALLOWABLE DEVIATIONS WITHIN STAIRWAYS REFER TO NCC VOLUME TWO, PART 3.9.1

RAMPS (EXTERNAL OR INTERNAL) TO BE IN ACCORDANCE WITH NCC VOLUME TWO CLAUSE 3.9.1.3
RAMPS MUST HAVE A GRADIENT NOT STEEPER THAN 1:8
RAMPS MUST HAVE A LANDING COMPLYING WITH NCC VOLUME TWO CLAUSE 3.9.1.5 AT THE TOP AND BOTTOM AND AT INTERVALS NOT GREATER THAN 15 METERS
RAMPS TO HAVE A SURFACE WITH A SLIP-RESISTANCE CLASSIFICATION NOT LESS THAN P4 FOR DRY SCENARIOS AND P5 FOR WET SCENARIOS AND BEEN TESTED IN ACCORDANCE WITH AS 4586

LANDINGS TO BE IN ACCORDANCE WITH NCC VOLUME TWO CLAUSE 3.9.1.5
LANDINGS TO HAVE A MAXIMUM GRADIENT OF 1:50 AND BE NOT LESS THAN 750 MM LONG, AND WHERE THIS INVOLVES A CHANGE IN DIRECTION THE LENGTH IS MEASURED 500 MM FROM THE INSIDE EDGE OF THE LANDING

LANDINGS TO HAVE A SURFACE WITH A SLIP-RESISTANCE CLASSIFICATION NOT LESS THAN P3 FOR DRY SCENARIOS AND P4 FOR WET SCENARIOS AND BEEN TESTED IN ACCORDANCE WITH AS 4586

WHERE THE THRESHOLD OF A DOORWAY IS MORE THAN 230MM ABOVE THE ADJOINING SURFACE IT MUST INCORPORATE A STAIRWAY IN ACCORDANCE WITH NCC VOLUME TWO CLAUSE 3.9.1.2

BARRIERS TO BE IN ACCORDANCE WITH NCC VOLUME TWO CLAUSE 3.9.2.2 & 3.9.2.3

A CONTINUOUS BARRIER MUST BE PROVIDED ALONG THE SIDE OF A BALCONY, LANDING, DECK, STAIRWAY, RAMP, HALLWAY OR THE LIKE, WHERE THE TRAFFICABLE SURFACE IS 1M OR MORE ABOVE THE SURFACE BELOW

BARRIERS MUST BE NO LESS THAN 1000MM HIGH ABOVE FINISHED SURFACES (E.G. TILES) OF A BALCONY, DECK, HALLWAY, LANDING OR THE LIKE & NOT LESS THAN 865MM ABOVE NOSING OF TREADS ON STAIRWAYS, SURFACES OF A RAMPS

OPENINGS IN BALUSTRADES MUST BE CONSTRUCTED SO AS NOT TO PERMIT A 125MM DIAMETER SPHERE TO PASS THROUGH

BARRIERS, EXCEPT A WINDOW SERVING AS A BARRIER, MUST BE DESIGNED TO TAKE LOADING FORCES IN ACCORDANCE WITH AS/NZS 1170.1

BARRIERS IN OR ON AREAS OVER A CHANGE IN HEIGHT EXCEEDING 4M MUST NOT FACILITATE CLIMBING BETWEEN 150MM & 760MM ABOVE FLOOR LEVEL

WIRE BARRIERS MUST BE CONSTRUCTED IN ACCORDANCE WITH NCC VOLUME TWO CLAUSE 3.9.2.3 (g)

GLASS BARRIERS MUST BE CONSTRUCTED IN ACCORDANCE WITH NCC VOLUME TWO CLAUSE 3.9.2.3 (h) AND AS 1288

HANDRAILS TO BE IN ACCORDANCE WITH NCC VOLUME TWO CLAUSE 3.9.2.4

HANDRAILS MUST BE LOCATED WHERE A FLIGHT OF STAIRS OR A RAMP PROVIDES A CHANGE IN ELEVATION OF 1 METER OR MORE

HANDRAILS MUST BE LOCATED ALONG ONE SIDE OF A FLIGHT OF STAIRS OR A RAMP EXCEPT IN THE CASE WHERE A HANDRAIL IS ASSOCIATED WITH A BALUSTRADE THE HANDRAIL MAY TERMINATE WHERE THE BALUSTRADE TERMINATES

HANDRAILS MUST HAVE THEIR TOP SURFACE NOT LESS THAN 865MM VERTICALLY ABOVE THE NOSING OF THE STAIR TREADS OR THE FLOOR SURFACE OF THE RAMP

HANDRAILS MUST HAVE NO OBSTRUCTION ON OR ABOVE THEM THAT WILL TEND TO BREAK A HANDHOLD, EXCEPT FOR NEWEL POSTS, BALL TYPE STANCHIONS OR THE LIKE

WINDOWS WITHIN BEDROOMS WHERE F.F.L IS GREATER THAN 2000MM ABOVE THE SURFACE BENEATH THE WINDOW THE WINDOW MUST BE PROTECTED IN ACCORDANCE WITH NCC VOLUME TWO CLAUSE 3.9.2.5
WINDOWS WITHIN BEDROOMS WHERE F.F.L IS GREATER THAN 4000MM ABOVE THE SURFACE BENEATH THE WINDOW THE WINDOW MUST BE PROTECTED IN ACCORDANT WITH NCC VOLUME TWO CLAUSE 3.9.2.5 (c)

ALL GLAZING SHALL BE IN ACCORDANCE WITH AS 1288 & AS 2047

GLAZING, INCLUDING SAFETY GLAZING, SHALL BE INSTALLED TO A SIZE, TYPE AND THICKNESS TO COMPLY WITH THE NCC VOLUME 2 SECTION 3.6 FOR CLASS 1 AND 10 BUILDINGS WITH A DESIGN WINDSPEED OF NOT MORE THAN N3

SAFETY GLAZING TO BE USED IN THE FOLLOWING CASES.
ALL ROOMS - WITHIN 500MM VERTICAL TO THE FLOOR.
- WITHIN 1200MM VERTICAL FROM FLOOR AND/OR WITHIN 300MM HORIZONTAL FROM DOORS

BATHROOMS - WITHIN 2000MM VERTICAL FROM THE FLOOR LEVEL, SHOWER BASE AND BATH BASE.
- SHOWER SCREENS SHALL BE GRADE A SAFETY GLASS, LEVEL TO SHOWER ENCLOSURES AND 150MM ABOVE BATHS, BASIN, SINKS AND TROUGHS.

ALL TIMBER FRAMING TO COMPLY WITH AS 1684 , AS 1720 AND THE N.C.C VOLUME 2.
ALL CORNER STUDS TO BE DOUBLE SECURELY BLOCKED AND NAILED TO EACH OTHER

ALL PRIMARY TIMBER BUILDING ELEMENTS TO BE TREATED IN ACCORDANCE WITH AS 1684

TERMITE MANAGEMENT IN ACCORDANCE WITH AS 3660.1

TIMBER HAZARD TREATMENT LEVELS
- INTERIOR, ABOVE THE GROUND - H2.
- EXTERIOR, ABOVE THE GROUND - H3.
- EXTERIOR IN GROUND CONTACT - H4 AND H5.

TRUSS LAYOUT REQUIRED FOR CONFIRMATION OF ALL STRUCTURAL MEMBER SIZES

SUBFLOOR VENTILATION TO BE IN ACCORDANCE WITH NCC VOLUME TWO PART 3.4.1. THE SUB FLOOR SPACE MUST BE CLEARED OF ALL DEBRIS AND VEGETATION AND ALSO HAVE EVENLY SPACED VENTILATION OPENINGS BOTH THROUGH EXTERNAL WALLS AND INTERNAL WALLS WITHIN THE SUB-FLOOR SPACE. THE VENTILATION OPENINGS MUST BE INCREASED IN FREQUENCY WITHIN AREAS TO COMPENSATE FOR OTHER AREAS WHERE PATIOS OR THE LIKE MAKE VENTILATION OPENINGS IMPOSSIBLE SO THAT THE OVERALL VENTILATION IS MAINTAINED AND VENTS MUST ALSO BE LOCATED NOT MORE THAN 600mm IN FROM A CORNER OF THE ENCLOSED SUB-FLOOR SPACE.

MINIMUM AGGREGATE SUB-FLOOR VENTILATION OPENINGS,
CLIMATIC ZONE A - 2000MM² PER LINEAR METRE OF SUBFLOOR PERIMETER
CLIMATIC ZONE B - 4000MM² PER LINEAR METRE OF SUBFLOOR PERIMETER
CLIMATIC ZONE C - 6000MM² PER LINEAR METRE OF SUBFLOOR PERIMETER

ROOM HEIGHTS WITH IN A CLASS 1 MUST BE NO LESS THEN,
- 2.1M IN A KITCHEN, LAUNDRY OR THE LIKE,
- 2.1M IN A CORRIDOR, PASSAGEWAY OR THE LIKE,
- 2.4M IN A HABITABLE ROOM (EXCLUDING A KITCHEN),
FOR RAKED CEILINGS REFER PART 3.8.2 OF THE NCC VOLUME TWO

CONCRETE SLAB ,FOOTINGS AND PAD FOOTINGS AS PER ENGINEER'S DESIGN.
DAMP PROOF COURSE/ VAPOUR BARRIER TO BE PROVIDED BETWEEN SLAB/ FOOTINGS AND GROUND

INTERMEDIATE FLOOR MEMBERS AND BEAMS AS PER ENGINEER'S AND TRUSS MANUFACTURES DESIGN & SPECIFICATIONS

ROOF BRACING - REFER TRUSS MANUFACTURES DESIGN & SPECIFICATIONS
WALL BRACING- IF NOT COMPLETE WITHIN THIS DRAWING SET, TO BE DESIGNED BY ENGINEER

BUILDING TIE-DOWNS TO BE PROVIDED IN ACCORDANCE WITH AS1684

LINTELS - REFER TO SCHEDULE AND/OR ENGINEER'S DESIGN & DETAILS

INSTALLATION & SELECTION OF MASONRY TO BE IN ACCORDANCE WITH AS 3700 AND AS 4773 AND THE NCC VOLUME TWO PART 3.3

DAMP PROOF COURSE TO BE INSTALLED IN ACCORDANCE WITH 4773.2-2010, THE HEIGHT OF THE DPC SHALL BE NOT LESS THAN,
- 150mm ABOVE THE ADJACENT FINISHED GROUND LEVEL,
- 75mm ABOVE THE FINISHED PAVED, CONCRETE OR LANDSCAPED AREAS THAT SLOPE AWAY FROM THE WALL
- 50mm ABOVE FINISHED PAVED, CONCRETE OR LANDSCAPED AREAS THAT SLOPE AWAY FROM THE WALL AND ARE PROTECTED FROM THE DIRECT EFFECT OF THE WEATHER

WEEPHOLES AND OTHER MASONRY ACCESSORIES TO COMPLY WITH EITHER AS 3700 OR AS 4773. REFER SECTION 3.3.3 OF THE NCC VOLUME TWO

ARTICULATION JOINTS IF SHOWN ARE APPROXIMATE LOCATIONS ONLY - ACTUAL LOCATIONS AND SPECIFICATIONS TO BE CONFIRMED WITH AS 4773 MASONRY FOR SMALL BUILDINGS AND/OR ENGINEER. REFER SECTION 3.3 OF THE NCC VOLUME TWO

ALL WALL CLADDINGS TO BE INSTALLED IN ACCORDANCE WITH THE MANUFACTURES SPECIFICATIONS, ANY RELEVANT STANDARDS AND THE NCC VOLUME TWO PART 3.5.3

INSTALLATION & SELECTION OF METAL ROOF & WALL CLADDING TO BE IN ACCORDANCE WITH AS 1562 AND THE NCC VOLUME TWO PART 3.5.1

INSTALLATION & SELECTION OF ROOFING TILES TO BE IN ACCORDANCE WITH AS 2049 & AS 2050 AND THE NCC VOLUME TWO PART 3.5.1

GUTTER (SPOUTING) - PROFILE AS SELECTED

FASCIA - AS PER CLIENT'S SPECIFICATIONS

ALL INSULATION INSTALLED TO COMPLY WITH AS 4859.1 AND THE NCC VOLUME TWO PART 3.12.1

ARTIFICIAL LIGHTING TO BE INSTALLED IN ACCORDANCE WITH THE NCC VOLUME TWO PART 3.12.5

WINDOW & GLASS DOOR SIZES SHOWN ARE NOMINAL ONLY. ACTUAL SIZE MAY VARY ACCORDING TO MANUFACTURER. WINDOWS TO BE FLASHED ALL AROUND. WINDOW SELECTION AND INSTALLATIONS MUST COMPLY WITH AS 2047. ALL GLAZING MUST COMPLY WITH AS 1288.
WINDOWS TO COMPLY WITH AS 3959 FOR THE CORRESPONDING BAL LEVEL FOR THE PROJECT SITE

ALL NEW CLASS 1 BUILDINGS NEED TO BE PROVIDED WITH EITHER A SOLAR HOT WATER SERVICE OR A MINIMUM 2000Lt WATER TANK CONNECTED TO WC's FLUSHING SYSTEMS WITH A MINIMUM 50M² CATCHMENT AREA

SWIMMING POOLS ASSOCIATED WITH A CLASS 1 BUILDING, WITH A DEPTH OF WATER MORE THAN 300MM MUST HAVE SAFETY BARRIERS INSTALLED IN ACCORDANCE WITH AS 1926 PARTS 1 & 2 AND NCC VOLUME 2 PART 3.9.3

PROJECT DETAILS

BUILDING CLASS/ES - 1 & 10a (REFER NCC VOL. 2 PART 1.3)

CLIMATE ZONE (THERMAL) - 6 (REFER NCC VOL. 2 FIGURE 1.1.4)

CLIMATIC ZONE (RELATIVE HUMIDITY) - C (REFER NCC VOL. 2 PART 3.4.1)

REGION (WIND LOADING) - A (REFER AS 4055)

WIND CLASS (WIND SPEED RATING) - N2 - 33m/s (REFER AS 4055)

PENNO DRAFTING & DESIGN
33 BREEN STREET BENDIGO, Ph: (03)54443315, CDP-AD 57597

Design Matters National
The peak body for the building design profession
Member

© COPYRIGHT

DO NOT SCALE DRAWINGS

PROJECT CLIENT: AMY AND GLENN TURNBULL	REFERENCE No:	R21-220	DRAWING: GENERAL AND BAL NOTES
	ISSUE NUMBER:	REV-6	
PROJECT ADDRESS: LOT 38 DARLING COURT, WANDONG	DATE:	26/08/2022	
	DRAWN BY:	B.M	
	CHECKED BY:	G.P	SCALE: (A1 SHEET) SHEET No.: 09

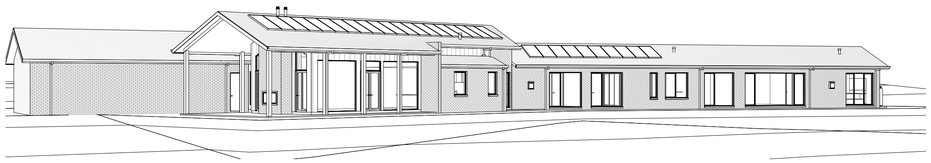

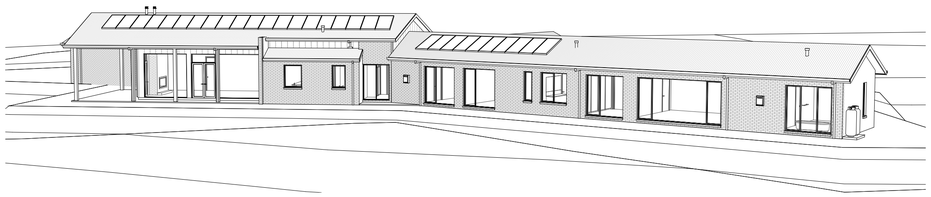

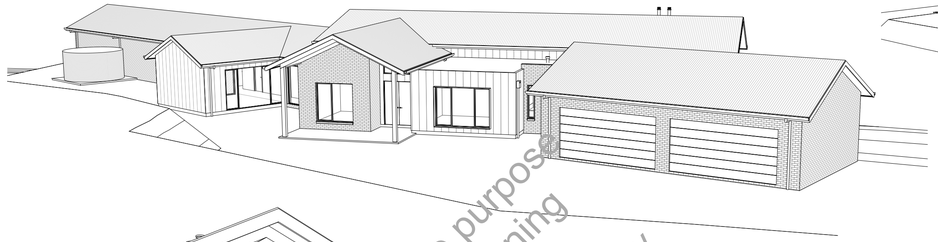

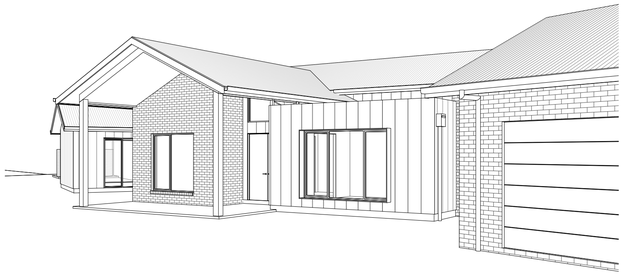

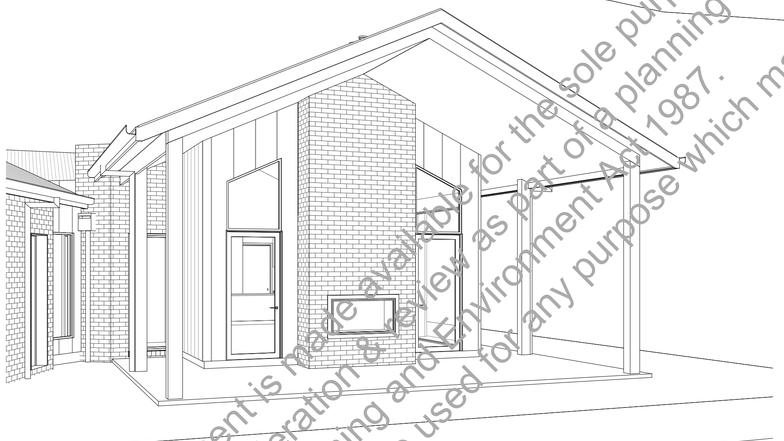

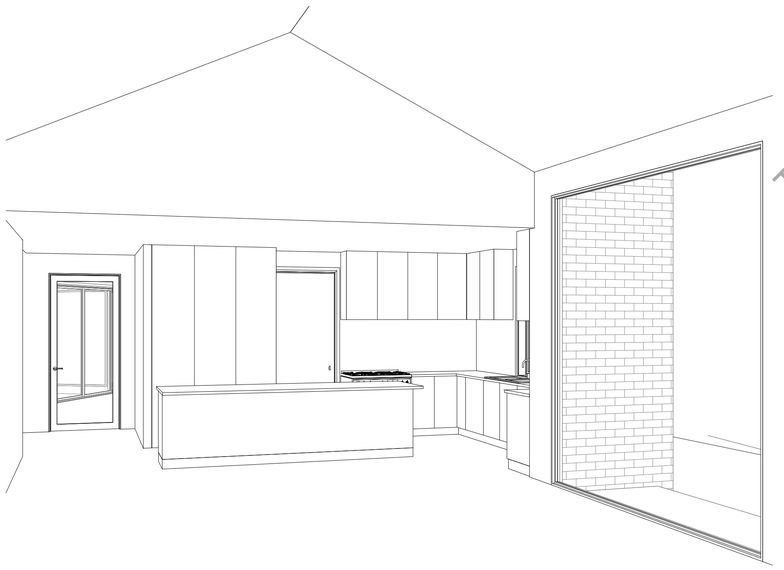

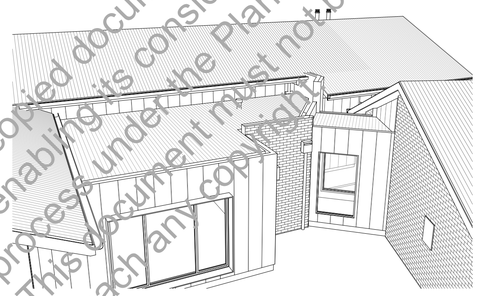

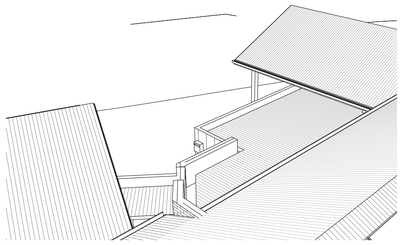

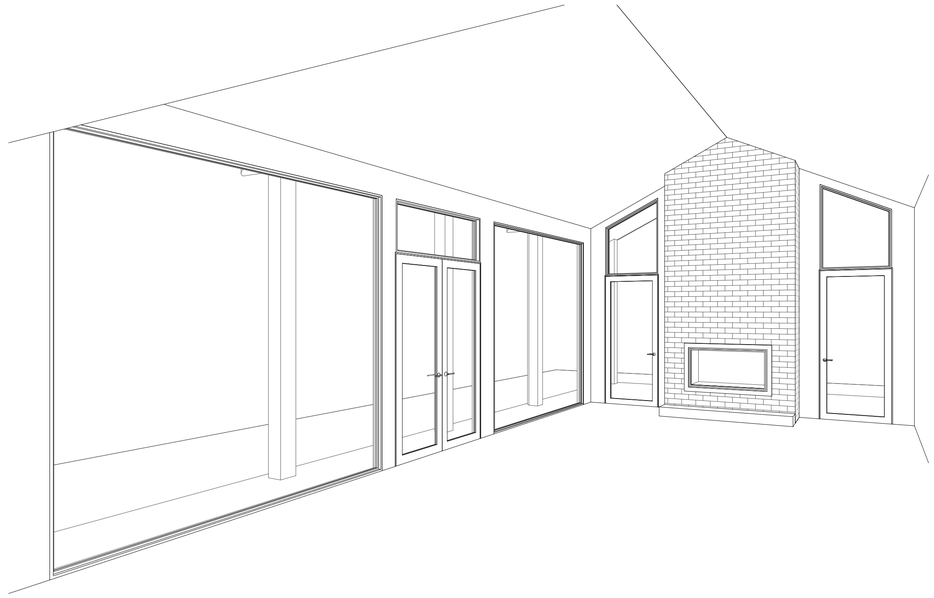

This copied document is made available for the sole purpose of enabling its consideration & review as part of a planning process under the Planning and Environment Act 1987. This document must not be used for any purpose which may breach any copyright.

PENNO DRAFTING & DESIGN
33 BREEN STREET BENDIGO, Ph: (03)54443315, CDP-AD 57597

Design Matters National
The peak body for the building design profession
Member

© COPYRIGHT

DO NOT SCALE DRAWINGS

PROJECT CLIENT:
AMY AND GLENN TURNBULL

PROJECT ADDRESS:
LOT 38 DARLING COURT, WANDONG

REFERENCE No:	R21-220
ISSUE NUMBER:	REV-6
DATE:	26/08/2022
DRAWN BY:	B.M
CHECKED BY:	G.P

DRAWING:
3D-VIEWS

SCALE: (A1 SHEET)

SHEET No.: 10

GENERAL NOTES

These documents show the general arrangement of the building and include some items not supplied (refer to the quotation for nomination of all items to be provided). All items not nominated therein shall be supplied and installed by others.

The plans provided here are the latest at the time of print. Earlier plans provided may have become outdated due to engineering changes and should not be used. The plans and drawings are extensive and give all the information needed for a competent person to erect the building. The building is not designed to stand up by itself when it is partially complete. Consequently, construction bracing is critical during erection.

The owner has been requested to check off the BOM after the building delivery. You should check that you are able to locate all materials nominated in the BOM. You should also confirm that the length and size (including thickness), nominated in the BOM is what has been provided. Any missing items are the responsibility of the client once correct delivery has been confirmed as per Terms and Conditions of Sale.

DESIGN CRITERIA

These building plans have been prepared to comply with the standards nominated in the engineer's letter. All plans are not to Scale.

ADDITIONAL DOCUMENTATION TO BE SUPPLIED BY PURCHASER/OWNER

The Purchaser/Owner is responsible for:
*Provision of Soils Report for the site and in the building area on which the building is to be erected
*Site Plan and Drainage Plans
*Any other plans not covered by these engineering plans requested by the local Council or the authority

RAINWATER AND DRAINAGE

All Rainwater and drainage designs are the responsibility of the purchaser/owner. Residential gutters and downpipes where supplied are based on average rainfall for the state and may not be sufficient for your building size or usage. Please speak to your building designer or contractor to ensure gutters are fit for purpose.

BUILDING CONSTRUCTION REQUIREMENTS

The Builder and Purchaser are to ensure that all construction is carried out in accordance with the Plans, the Construction Manual and the Bill of Materials (BOM).

It is the responsibility of the builder to ensure that they are familiar with the operational risks and their obligations in carrying out construction work.

The builder must ensure that they have an appropriate Health & Safety Plan (The Plan) compliant with and as required by their local, state and federal regulations. The Plan will need to take into account the site conditions, the size of the building and the experience of the construction personnel. The Plan will, most likely, differ for each project.

The builder must ensure that The Plan is adhered to. Particular attention should be paid to the requirements to ensure that any person working at heights are properly trained and following the requirements as set out by The Plan.

It is recommended that you check with the appropriate authority in your area as to your responsibilities.

TEMPORARY SUPPORT, LIFTING AND SHORING

The design of temporary propping shoring, lifting and support during construction has not been undertaken and is not included in our engagement. This work is the responsibility of the Contractor undertaking the construction of the building.

SLAB DETAILS - GENERAL

* The minimum size of Piers under the columns and End Wall Mullions are nominated on the Material Specifications Plan. When the slab and piers are poured as one pour, the depth of the pier is to the bottom of the slab.

* Pier Reinforcement: for any piers over 1100mm, deformed bar to within 100mm of base and minimum 75mm top cover. Minimum side cover 75mm, maximum 100mm. Rod to be caged horizontally at least twice and at a maximum of 300mm spacing.Tie with a minimum of 6mm diameter cage tie.. Where pier diameter is less than 450mm diameter, use 4 N12. For diameters equal to and over 450mm, use 4 N16.

Concrete Slab

* Footings and slabs, including internal and edge beams, must be founded on natural soil with a minimum allowable bearing capacity of 100kPa. Design covers soil classifications of A, S, M, H1 or H2 for a class 10 building.
* The footing designs have been calculated with adhesion values of 0kPa, 25kPa and 50kPa for clay soils and dense sand soils only.
* A site specific geotechnical investigation has not been performed. The builder will need to verify the soil type and conditions.
* Site conditions different to those specified require a modified design.
* Sub grade shall be excavated and compacted to a minimum of 100% standard dry density ratio and within 2% of the OMC to comply with AS2159.
* Designs are in accordance with AS 3600:2018
* All concrete to be in accordance with AS 3600:2018. Minimum 25 Mpa, with 80mm slump.
* Concrete should be cured for 7 days before commencing construction of the building.
* Refer to connection details.
* Saw construction joints to be 25mm deep x 5mm wide. Saw cuttings shall take place no later than 24 hours after pouring. Saw construction joints to be placed at a maximum spacing of 6.3m (in both the length and the span). Care should be taken to avoid construction cuts intersecting where any fixing to the slab is to be made.
* Where columns or end wall mullions have been removed, piers are not required.
* End wall mullion spacing may move due to location of openings or doors. Check layout and component position plan, and relocate piers as required.

* The Slab Plan indicates those parts of the slab which are 50mm below main slab/piers.

For Class A, S or M Sites

* Slab thickness to be a minimum of 100mm with SL 72 mesh and 40mm top cover.

* Concrete piers under Roller Doors Jambs to be a minimum size as below:
C25019 - 450mm dia x 550mm deep, centered to the C Section
Where heavy traffic is to go through the roller doors, it is recommended that the slab edge should be thickened to 200mm deep by 300mm wide for the length between the mullions. Place an additional section of SL 72 mesh, 50mm from the base in all thickenings.

For Class H1 or H2 Sites

* Slab thickness to be a minimum of 100mm with SL 82 mesh and 40mm top cover.

* Perimeter beams 400mm deep x 300mm wide with Y12 3 bar Trench Mesh to the perimeter of the building.
* Internal beams 400mm deep by 300mm wide with Y12 3 bar Trench Mesh at a max spacing of 6.2m.
* Concrete piers under Roller Doors Jambs to be a minimum size as below:
C25019 - 450mm dia x 700mm deep, centered to the C Section

BRACING NOTES

* Refer to Connection Details.
* All Cross Bracing is achieved with 1.2mm Strap G450.
* Cross bracing is to be fixed taut and secured with 14.20 x 22 frame screws at each end, quantity as per connection details.
* Fly bracing to be fixed to the purlins/girts on all mid portal rafters, columns and end wall mullions. Fly bracing is to be fitted to every second purlin/girt, or, on every one, where the spacing between fly braces would exceed the maximum specified below for the relevant column/rafter size:
  - C150 - maximum 1800mm spacing
  - C200, C250 - maximum 2200mm spacing
  - C300 - maximum 2800mm spacing
  - C350 - maximum 2800mm spacing
  - C400 - maximum 2800mm spacing

Initial measurement is from the haunch of the column/rafter, and from the rafter for any end wall mullions.
* All bracing strap ends to be located as close as practical to structural member's (columns, rafters, mullions) centerline.

BOLTS

* Unless otherwise nominated, all bolts are grade 4.6
* All tensioned bolts shall be tensioned using the part turn method (refer to AS4100). For the erector, full details are in the construction manual.

Roller Doors

All comments regarding roller doors are based from inside the building looking out.

This copied document is made available for the sole purpose of advising its consideration as part of a planning process under the Planning and Environment Act 1987. The document must not be used for any purpose which may breach any copyright.

Revision	Date	Initial

Purchaser Name: Amy Turnbull

Site Address: 3 Darling Court Wandong VIC 3758 Australia

Drawing # WSS221082 - 2

Print Date: 31/03/2022

General Notes
NOT FOR CONSTRUCTION

©Copyright Steelx IP Pty Ltd

Seller: Wide Span Sheds Pty Ltd
Name: Wide Span Sheds Pty Ltd
Phone: 07 5657 8888
Fax: 07 5657 8899
Email: admin@sheds.com.au

Apex Engineering Group PTY LTD
ACN 632 588 562
MIE Aust. (Registered NER Structural) 5276680
QLD : RPEQ No. 24223; TAS : 185770492; VIC : PE0003848; N.T : 303557ES;
Practising Professional Structural & Civil Engineers

Signature:

John Ronaldson

Date: 31/03/22

OTHER MATERIALS NOTES

* All Sheeting, Flashing and framing screws are Climaseal 4.
* All purlin material has Z350 zinc coating with minimum strength of 450MPa.

This copied document is made available for the sole purpose of enabling its consideration & review as part of a planning process under the Planning and Environment Act 1987. This document must not be used for any purpose which may breach any copyright.

Revision	Date	Initial

Purchaser Name: Amy Turnbull

Site Address: 3 Darling Court Wandong VIC 3758 Australia

Drawing # WSS221082 - 2

Print Date: 31/03/2022

General Notes
NOT FOR CONSTRUCTION

PAGINATION

©Copyright Steelx IP Pty Ltd

Seller: Wide Span Sheds Pty Ltd
Name: Wide Span Sheds Pty Ltd
Phone: 07 5657 8888
Fax: 07 5657 8899
Email: admin@sheds.com.au

Apex Engineering Group PTY LTD
ACN 632 588 562
MIE Aust. (Registered NER Structural) 5276680
QLD : RPEQ No. 24223; TAS : 185770492; VIC : PE0003848; N.T : 303557ES;
Practising Professional Structural & Civil Engineers

Signature:

John Ronaldson

Date: 31/03/22

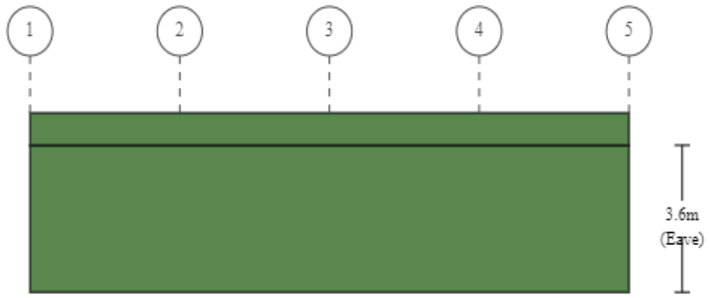

Left Side

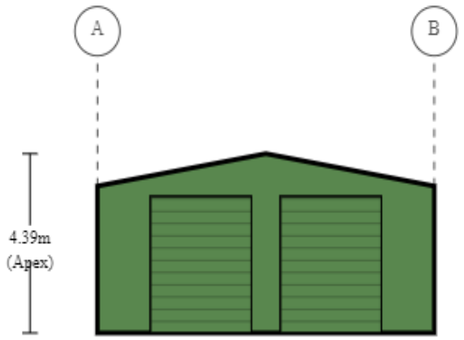

Left End

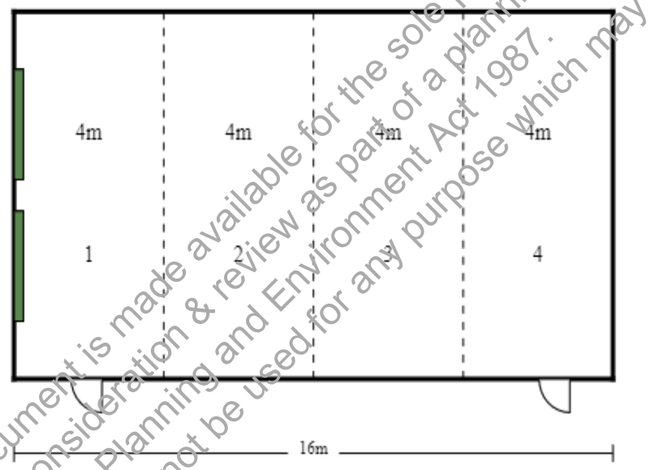

Right Side

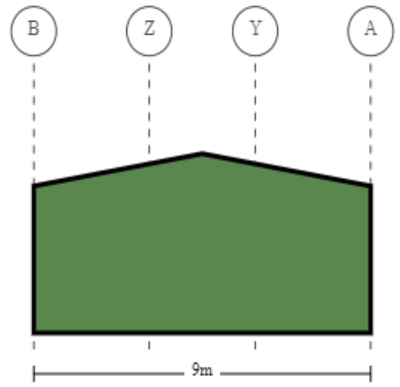

Right End

This copied document is made available for the sole purpose of enabling its consideration & review as part of a planning process under the Planning and Environment Act 1987. This document must not be used for any purpose which may breach any copyright.

Purchaser Name: Amy Turnbull		**Layout** **NOT FOR CONSTRUCTION** Not to Scale © Copyright Steelx IP Pty Ltd	Seller: Wide Span Sheds Pty Ltd Wide Span Sheds Pty Ltd Phone: 07 5657 8888 Fax: 07 5657 8899 Email: admin@sheds.com.au
Site Address: 3 Darling Court Wandong VIC 3758 Australia			
Drawing # WSS221082 - 3	Print Date: 31/03/22		

Apex Engineering Group PTY LTD
ACN 632 588 562
MIE Aust. (Registered NER Structural) 5276680
QLD : RPEQ No. 24223; TAS : 185770492; VIC : PE0003848; N.T : 303557ES;
Practising Professional Structural & Civil Engineers

Signature:

John Ronaldson

Date: 31/03/22

MATERIAL SPECIFICATIONS

For further information regarding the tabulated values shown, refer to the General Notes

Building Dimensions

Categories	Span	Length	Pitch	Height	Grid(s)	Portal(s)
Main Building	9	16	10	3.6	A - B	1 - 5

Portal Frame Elements

Grid / Portal Number		1	2	3	4	5
Columns	A	C15015	C20019	C20019	C20019	C15015
	B	C15015	C20019	C20019	C20019	C15015
Rafters	A - Apex	C15012	C20015	C20015	C20015	C15012
	Apex - B	C15012	C20015	C20015	C20015	C15012
End Wall Mullions	Y	-	-	-	-	C15015
	Z	-	-	-	-	C15015
Apex Braces	Apex	-	C15012 @ 2.7m	C15012 @ 2.7m	C15012 @ 2.7m	-

Bay Section Elements

Grid / Bay Number		1	2	3	4	Maximum
Bay Widths		4	4	4	4	
Roof Purlins (refer to Purlin And Girt Plan)		Z100	Z100	Z100	Z100	
Roof Purlin Spacing (End)	A - Apex	1.098	1.098	1.098	1.098	1.400
	Apex - B	1.098	1.098	1.098	1.098	1.400
Roof Purlin Spacing (Internal Spans)	A - Apex	1.098	1.098	1.098	1.098	1.550
	Apex - B	1.098	1.098	1.098	1.098	1.550
Eave Purlin	A	C10010	C10010	C10010	C10010	
	B	C10012	C10012	C10010	C10010	
Side Girts (refer to Purlin And Girt Plan)		Z100	Z100	Z100	Z100	
Side Girt Bridging (Rows)	A	YES (1)	YES (1)	YES (1)	YES (1)	
	B	-	-	-	-	
Side Girts Spacing (End)	A	1.685	1.685	1.685	1.685	1.700
	B	1.685	1.685	1.685	1.685	1.700
Side Girts Spacing (Internal)	A	1.685	1.685	1.685	1.685	1.700
	B	1.685	1.685	1.685	1.685	1.700
PA Door Header	B	C10010	-	-	C10010	

End Bay Section Elements

Grid / Portal Number		1	5	Maximum
End Girts (refer to Purlin And Girt Plan)		Z100	Z100	
End Girts Spacing (End)	A - B	1.685	-	1.700
	A - Y	-	1.685	1.700
	Y - Z	-	1.685	1.700
	Z - B	-	1.685	1.700
End Girts Spacing (Internal)	A - B	1.685	-	1.700
	A - Y	-	1.685	1.700
	Y - Z	-	1.685	1.700
	Z - B	-	1.685	1.700
Roller Door Header	A - B	HEADER3	-	
	A - Y	-	-	
	Y - Z	-	-	
	Z - B	-	-	
Roller Door Jambs	A - B	C25019	-	
	A - Y	-	-	
	Y - Z	-	-	
	Z - B	-	-	

This copied document is made available for the sole purpose of enabling its consideration & review as part of a planning process under the Planning and Environment Act 1987. This document must not be used for any purpose which may breach any copyright.

Revision	Date	Initial

Purchaser Name: Amy Turnbull

Site Address: 3 Darling Court Wandong VIC 3758 Australia

Drawing # WSS221082 - 4

Print Date: 31/03/2022

Specification Sheet
NOT FOR CONSTRUCTION

©Copyright Steelx IP Pty Ltd

Seller: Wide Span Sheds Pty Ltd
Name: Wide Span Sheds Pty Ltd
Phone: 07 5657 8888
Fax: 07 5657 8899
Email: admin@sheds.com.au

Apex Engineering Group PTY LTD
ACN 632 588 562
MIE Aust. (Registered NER Structural) 5276680
QLD : RPEQ No. 24223; TAS : 185770492; VIC : PE0003848; N.T : 303557ES;
Practising Professional Structural & Civil Engineers

Signature:

John Ronaldson

Date: 31/03/22

MATERIAL SPECIFICATIONS

For further information regarding the tabulated values shown, refer to the General Notes

Cladding Elements

Category	Colour	Product
Roof Sheeting	Monument	TRIMCLAD® 0.42 BMT (0.47TCT)
Roof Flashings	COLORBOND® steel	BlueScope 0.55 BMT
Wall Sheeting	Monument	TRIMCLAD® 0.42 BMT (0.47TCT)
Wall Flashing	COLORBOND® steel	BlueScope 0.55 BMT

Pier Sizes

			Depth (m) - with Slab	
Adhesion (kPa)	Soil Description	Diameter (m)	BP1	BP2
0	Sandy Soil	0.3	0.45	-
		0.45	0.45	0.45
		0.6	0.45	0.45
25	Soft to Firm Clay	0.3	0.45	-
		0.45	0.45	0.45
		0.6	0.45	0.45
50	Stiff to Very Stiff Clay	0.3	0.45	-
		0.45	0.45	0.45
		0.6	0.45	0.45

This copied document is made available for the sole purpose of enabling its consideration & review as part of a planning process under the Planning and Environment Act 1987. This document must not be used for any purpose which may breach any copyright.

Revision	Date	Initial

Purchaser Name: Amy Turnbull

Site Address: 3 Darling Court Wandong VIC 3758 Australia

Drawing # WSS221082 - 4

Print Date: 31/03/2022

Specification Sheet
NOT FOR CONSTRUCTION

PAGINATION

©Copyright Steelx IP Pty Ltd

Seller: Wide Span Sheds Pty Ltd
Name: Wide Span Sheds Pty Ltd
Phone: 07 5657 8888
Fax: 07 5657 8899
Email: admin@sheds.com.au

Apex Engineering Group PTY LTD
ACN 632 588 562
MIE Aust. (Registered NER Structural) 5276680
QLD : RPEQ No. 24223; TAS : 185770492; VIC : PE0003848; N.T : 303557ES;
Practising Professional Structural & Civil Engineers

Signature:

John Ronaldson

Date: 31/03/22

Cross Bracing is achieved with 1.2mm Strap. Refer to Connection Details.
Cross bracing in the roof is to the purlin nearest to the end wall mullions, where applicable.

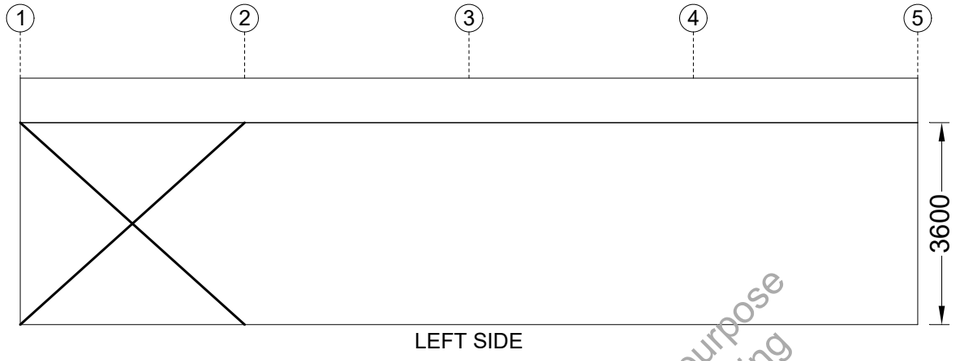

LEFT SIDE

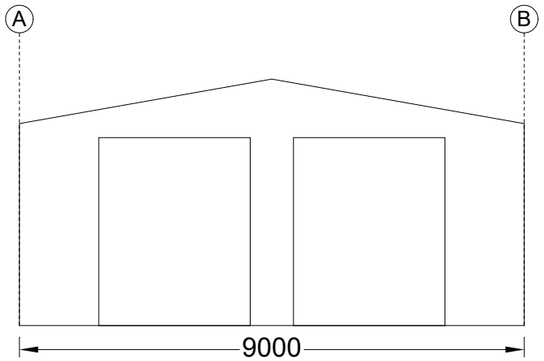

LEFT END

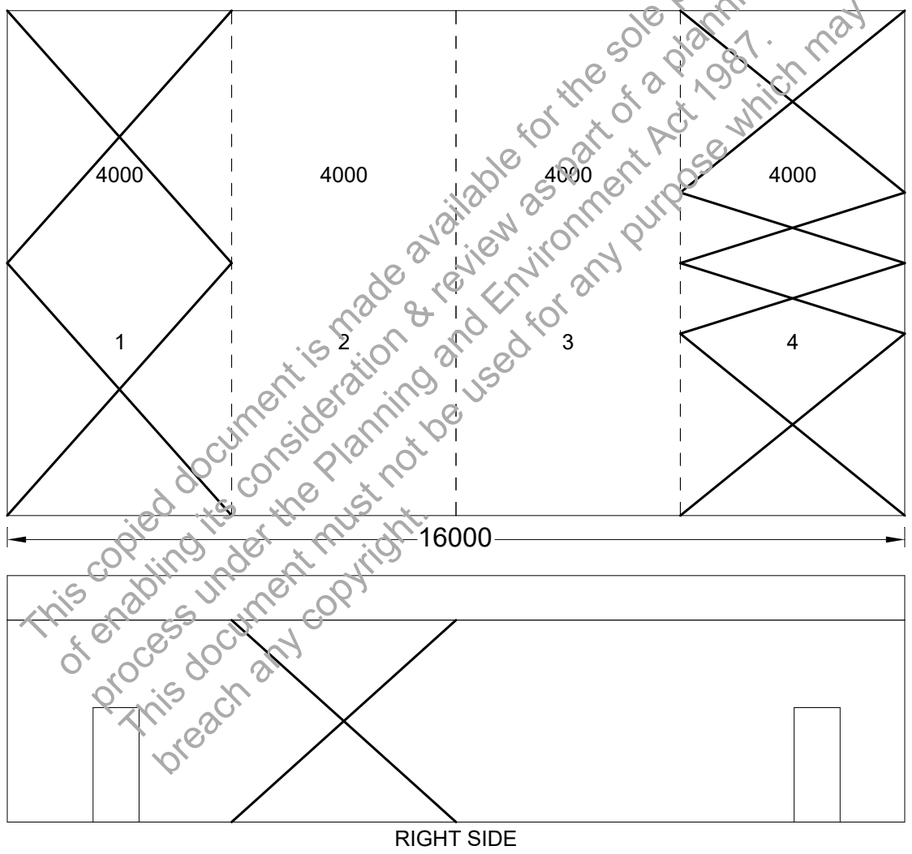

RIGHT SIDE

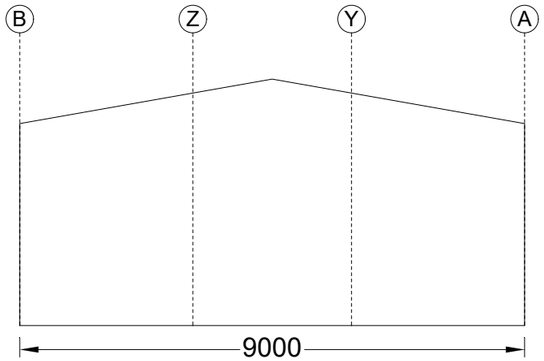

RIGHT END

This copied document is made available for the sole purpose of enabling its consideration & review as part of a planning process under the Planning and Environment Act 1987. This document must not be used for any purpose which may breach any copyright.

Revision	Date	Initial

Purchaser Name: Amy Turnbull

Site Address: 3 Darling Court Wandong VIC 3758 Australia

Drawing # WSS221082 - 5

Print Date: 31/03/2022

Bracing

NOT FOR CONSTRUCTION

NOT TO SCALE

©Copyright Steelx IP Pty Ltd

Seller: Wide Span Sheds Pty Ltd
Name: Wide Span Sheds Pty Ltd
Phone: 07 5657 8888
Fax: 07 5657 8899
Email: admin@sheds.com.au

Apex Engineering Group PTY LTD
ACN 632 588 562
MIE Aust. (Registered NER Structural) 5276680
QLD : RPEQ No. 24223; TAS : 185770492; VIC : PE0003848; N.T : 303557ES;
Practising Professional Structural & Civil Engineers

Signature:

John Ronaldson

Date: 31/03/22

These dimensions are provided as a guide only. It is the responsibility of the concreter to confirm that all dimensions are correct.
Refer to Material Specifications Plan for BP dimensions.

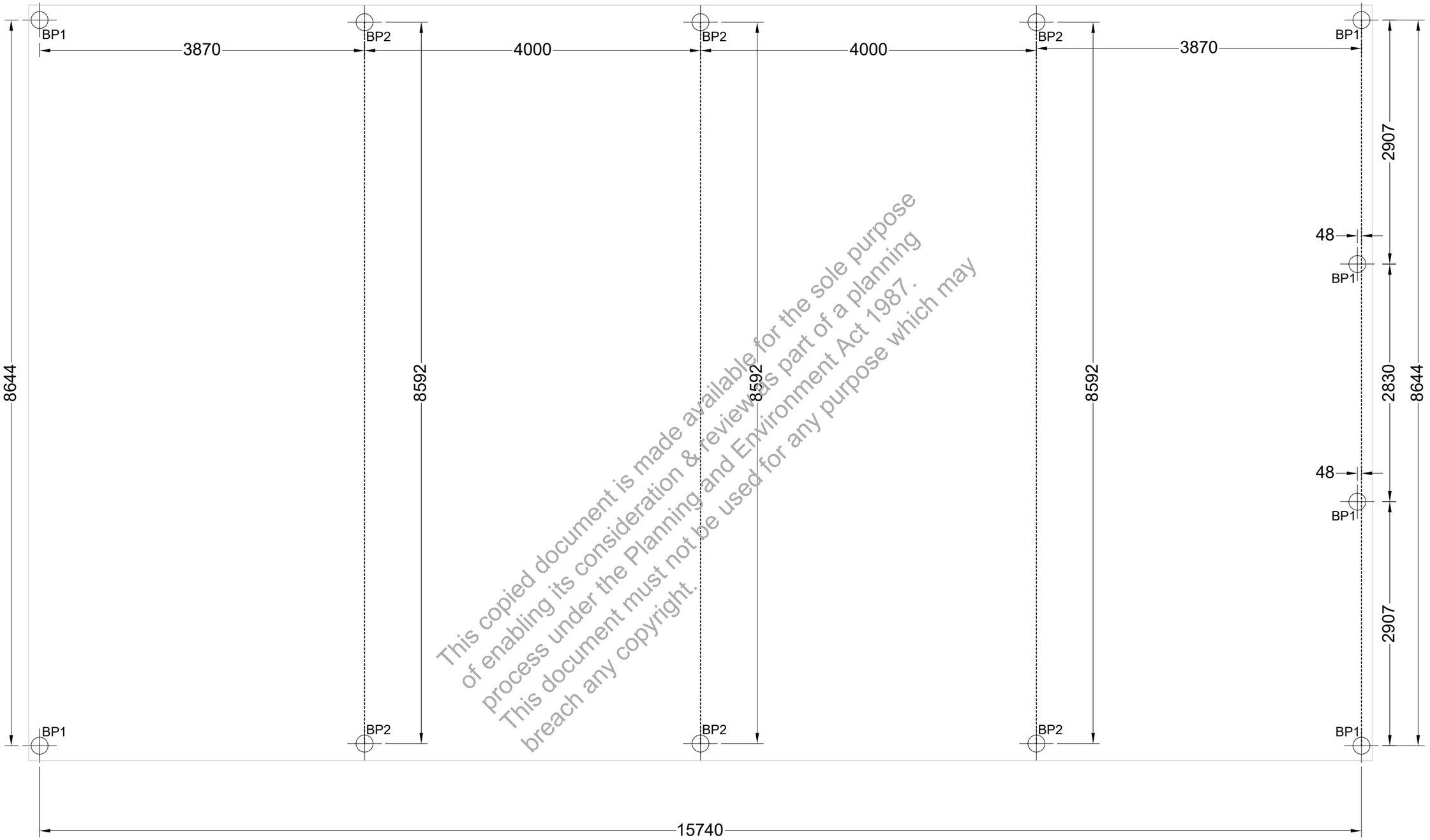

This copied document is made available for the sole purpose of enabling its consideration & review as part of a planning process under the Planning and Environment Act 1987. This document must not be used for any purpose which may breach any copyright.

Revision	Date	Initial

Purchaser Name: Amy Turnbull

Site Address: 3 Darling Court Wandong VIC 3758 Australia

Drawing # WSS221082 - 6

Print Date: 31/03/2022

Concrete Piers

PIER MEASUREMENT ONLY. NOT FOR CONSTRUCTION

NOT TO SCALE

Page 1 of 1

©Copyright Steelx IP Pty Ltd

Seller: Wide Span Sheds Pty Ltd
Name: Wide Span Sheds Pty Ltd
Phone: 07 5657 8888
Fax: 07 5657 8899
Email: admin@sheds.com.au

Apex Engineering Group PTY LTD
ACN 632 588 562
MIE Aust. (Registered NER Structural) 5276680
QLD : RPEQ No. 24223; TAS : 185770492; VIC : PE0003848; N.T : 303557ES;
Practising Professional Structural & Civil Engineers

Signature:

John Ronaldson

Date: 31/03/22

These dimensions are provided as a guide only. It is the responsibility of the concreter to confirm that all dimensions are correct.

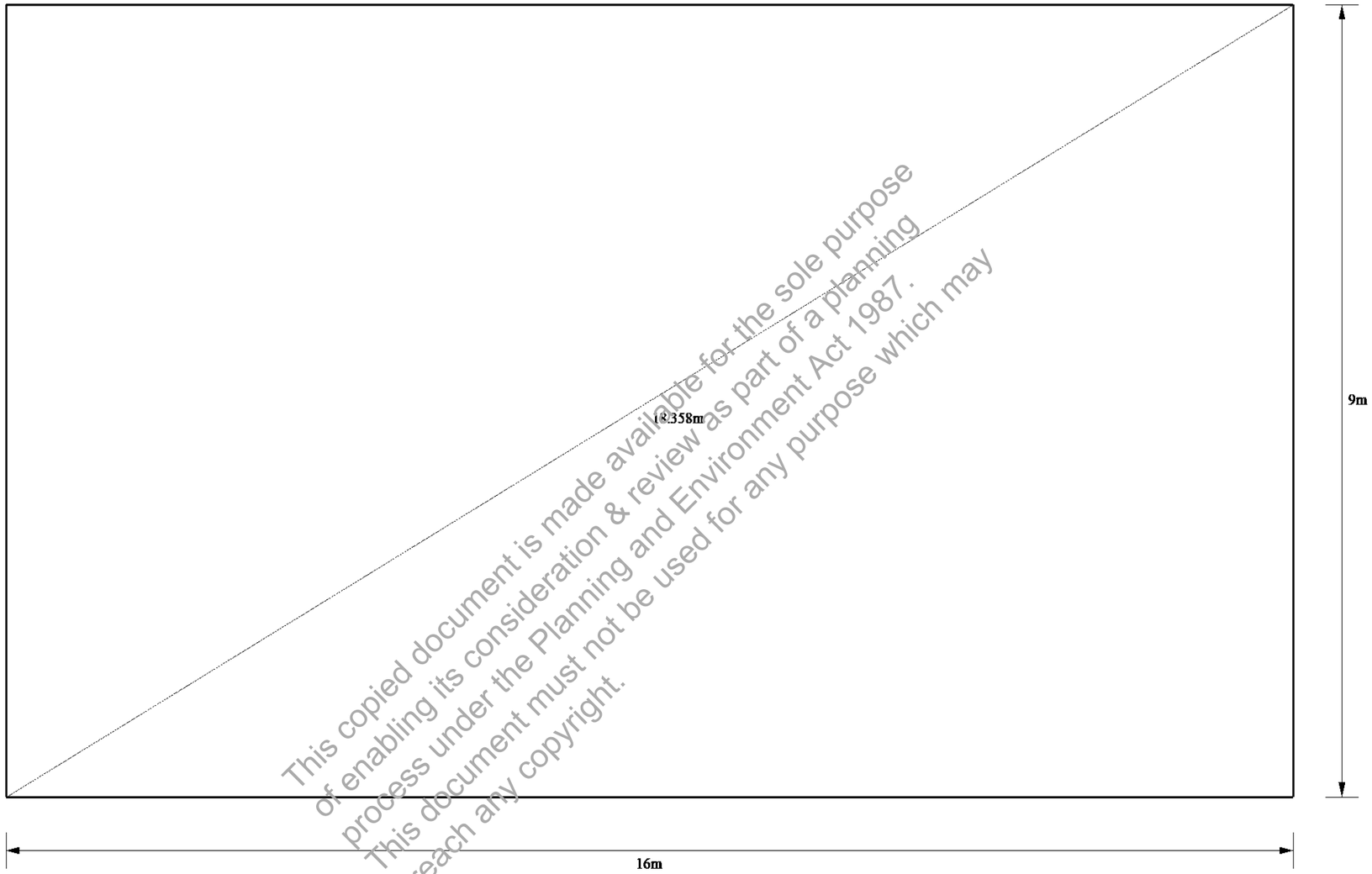

This copied document is made available for the sole purpose of enabling its consideration & review as part of a planning process under the Planning and Environment Act 1987. This document must not be used for any purpose which may breach any copyright.

Purchaser Name: Amy Turnbull		**Slab Dimensions** **Also refer to Concrete Piers Plan. NOT FOR CONSTRUCTION** Not to Scale © Copyright Steelx IP Pty Ltd	Seller: Wide Span Sheds Pty Ltd Wide Span Sheds Pty Ltd Phone: 07 5657 8888 Fax: 07 5657 8899 Email: admin@sheds.com.au
Site Address: 3 Darling Court Wandong VIC 3758 Australia			
Drawing # WSS221082 - 7	Print Date: 31/03/22		

Apex Engineering Group PTY LTD
ACN 632 588 562
MIE Aust. (Registered NER Structural) 5276680
QLD : RPEQ No. 24223; TAS : 185770492; VIC : PE0003848; N.T : 303557ES;
Practising Professional Structural & Civil Engineers

Signature:

John Ronaldson

Date: 31/03/22

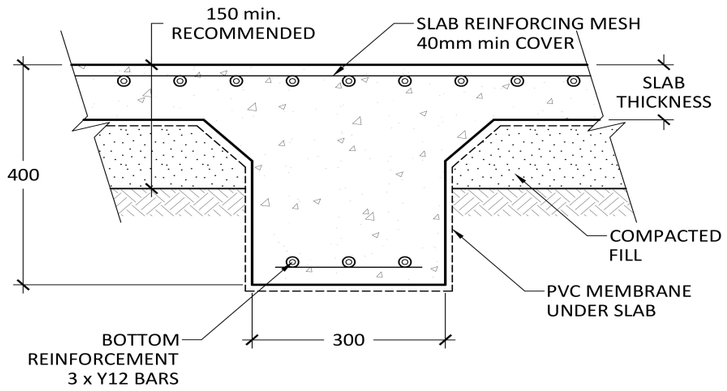

INTERNAL BEAM
(H1 & H2 SOIL TYPE, OPTIONAL A, S & M)

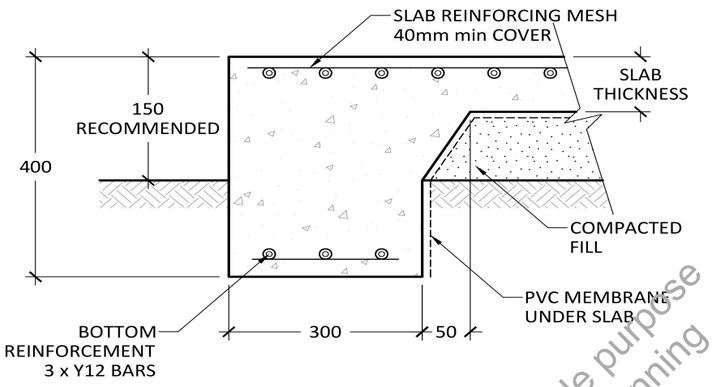

PERIMETER BEAM
(H1 & H2 SOIL TYPE, OPTIONAL A, S & M)

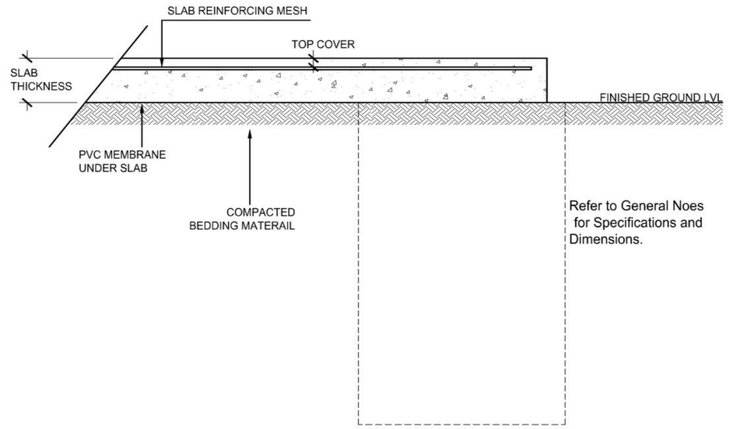

SLAB DETAIL BETWEEN PIERS
(Class A , S & M)

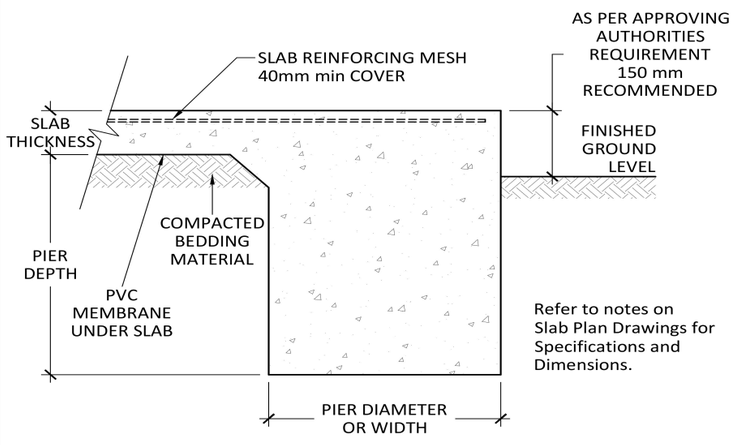

SLAB AND PIER DETAIL

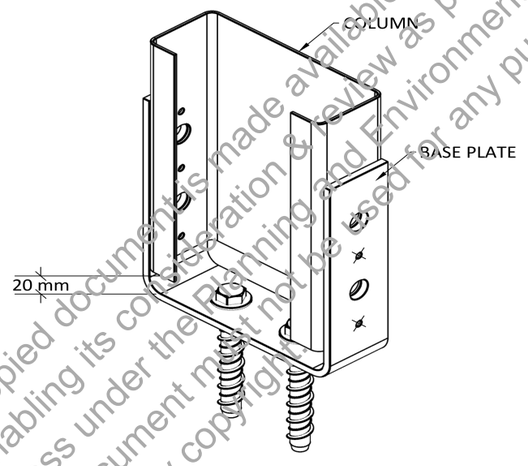

FIXING BOLTS - 2 of M12 x 100 SCREWBOLT
○ FIXING BOLTS - 4 of M12 x 30
× FIXING SCREWS - 4 of 12.24 x 38 Series 500

C150 COLUMN FIXING

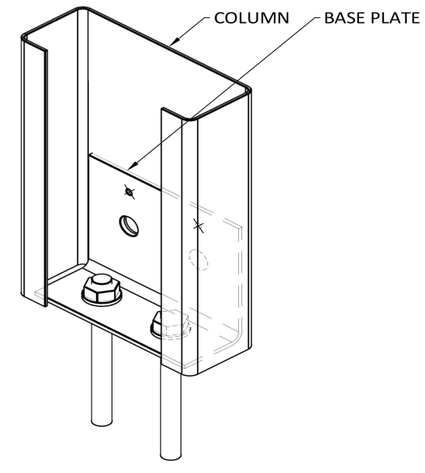

FIXING BOLTS - 2 of M12 x 80 TRUEBOLT
○ FIXING BOLTS - 2 of M12 x 30
× FIXING SCREWS - 2 of 14.20 x 22

C150 MULLION BASE PLATE

This copied documents made available for the sole purpose of enabling its consideration & review as part of a planning process under the Planning and Environment Act 1987. This document must not be used for any purpose which may breach any copyright.

Purchaser Name: Amy Turnbull			
Site Address: 3 Darling Court Wandong VIC 3758 Australia			
Drawing # WSS221082 - 8	Print Date: 31/03/22	**Connection Details** **NOT FOR CONSTRUCTION** Not to Scale Page 1 of 9 © Copyright SteelxIP Pty Ltd	Seller: Wide Span Sheds Pty Ltd Wide Span Sheds Pty Ltd Phone: 07 5657 8888 Fax: 07 5657 8899 Email: admin@sheds.com.au

Apex Engineering Group PTY LTD
ACN 632 588 562
MIE Aust. (Registered NER Structural) 5276680
QLD : RPEQ No. 24223; TAS : 185770492; VIC : PE0003848; N.T : 303557ES;
Practising Professional Structural & Civil Engineers

Signature:

John Ronaldson

Date: 31/03/22

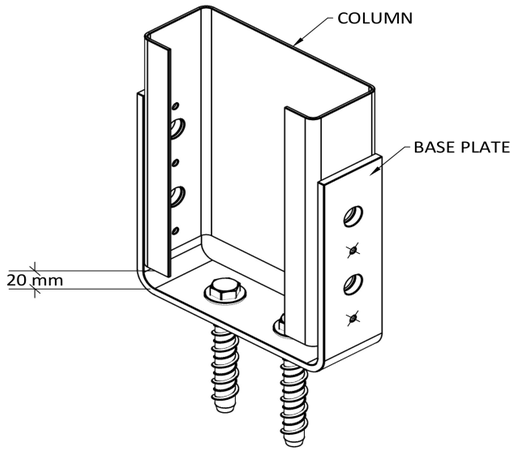

FIXING BOLTS - 2 of M12 x 100 SCREWBOLT
○ FIXING BOLTS - 4 of M12 x 30
× FIXING SCREWS - 4 of 12.24 x 38 Series 500

C200 COLUMN FIXING

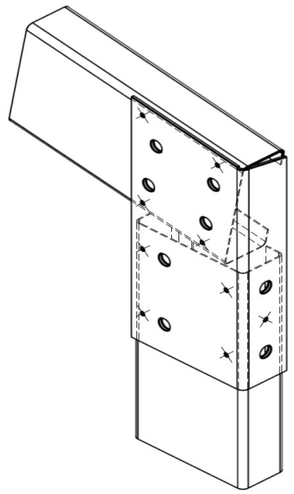

○ FIXING BOLTS - 8 of M12 x 30
× FIXING SCREWS - 9 of 14.20 x 22

HAUNCH BRACKET - C150, 10°

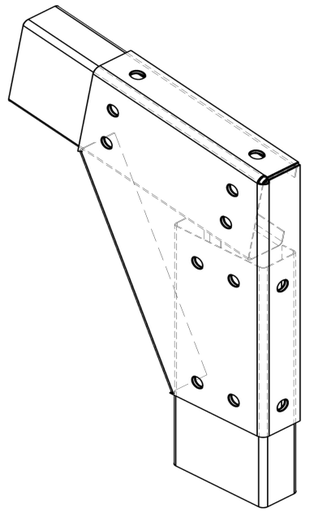

○ FIXING BOLTS - 12 of M12 x 30 (8.8)

KNEE HAUNCH BRACKET (HS&HT)

○ FIXING BOLTS - 8 of M12 x 30
× FIXING SCREWS - 12 of 14.20 x 22

APEX PLATE, C150, 10°

○ FIXING BOLTS - 8 of M12 x 30
× FIXING SCREWS - 12 of 14.20 x 22

APEX PLATE, C200, 10°

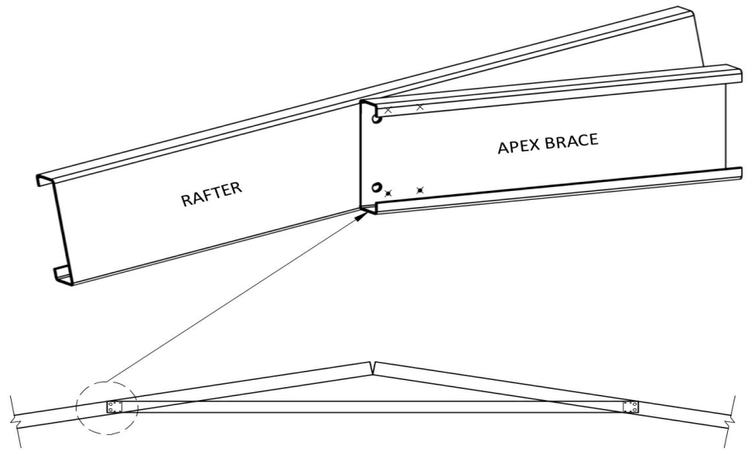

○ FIXING BOLTS - 2 of M12 x 40
× FIXING SCREWS - 4 of 14.20 x 22

APEX BRACE FOR SINGLE RAFTER

This copied document is made available for the sole purpose of enabling its consideration & review as part of a planning process under the Planning and Environment Act 1987. This document must not be used for any purpose which may breach any copyright.

Purchaser Name: Amy Turnbull		**Connection Details** **NOT FOR CONSTRUCTION** Not to Scale Page 2 of 9 © Copyright SteelxIP Pty Ltd	Seller: Wide Span Sheds Pty Ltd Wide Span Sheds Pty Ltd Phone: 07 5657 8888 Fax: 07 5657 8899 Email: admin@sheds.com.au
Site Address: 3 Darling Court Wandong VIC 3758 Australia			
Drawing # WSS221082 - 8	Print Date: 31/03/22		

Apex Engineering Group PTY LTD
ACN 632 588 562
MIE Aust. (Registered NER Structural) 5276680
QLD : RPEQ No. 24223; TAS : 185770492; VIC : PE0003848; N.T : 303557ES;
Practising Professional Structural & Civil Engineers

Signature:

John Ronaldson

Date: 31/03/22

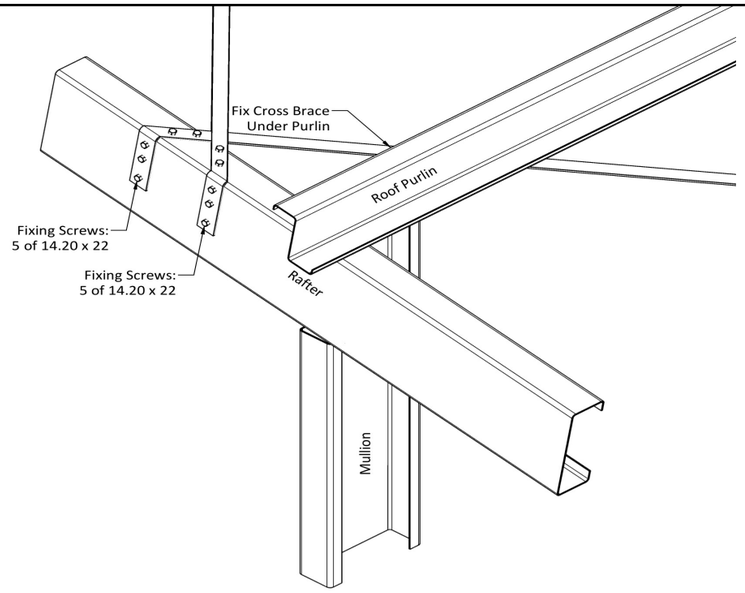

BRACING CONNECTION

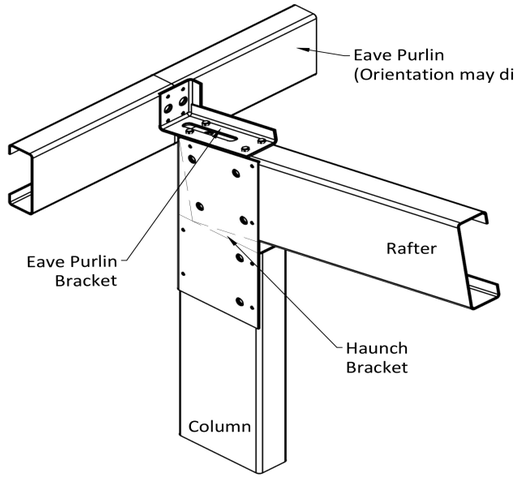

× FIXING SCREWS - 4 of 14.20 x 22

EAVE PURLIN BRACKET TO RAFTER

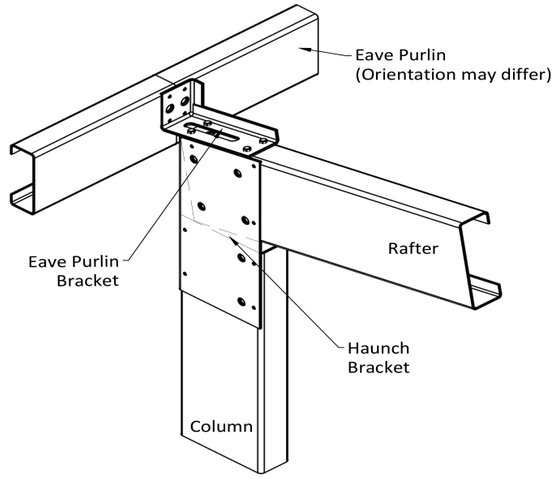

× FIXING SCREWS - 4 of 14.20 x 22

EAVE PURLIN BRACKET TO RAFTER

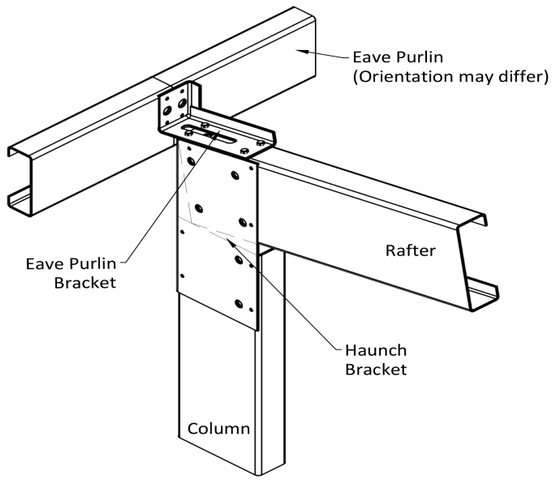

× FIXING SCREWS - 4 of 14.20 x 22

EAVE PURLIN BRACKET TO RAFTER

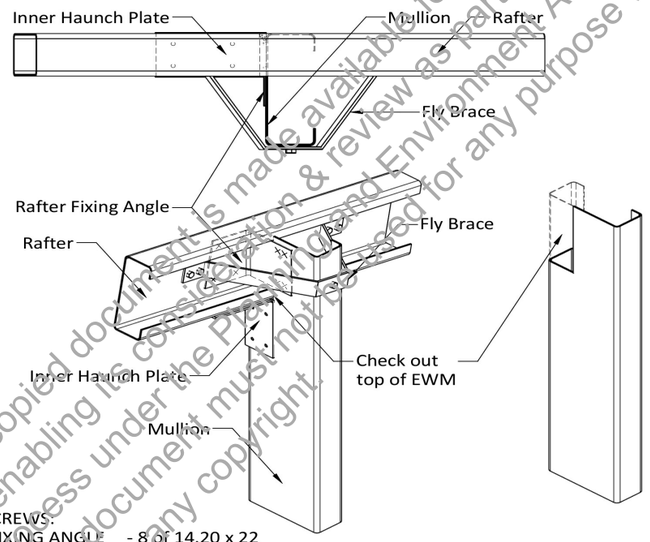

FIXING SCREWS:
RAFTER FIXING ANGLE - 8 of 14.20 x 22
INNER HAUNCH PLATE - 8 of 14.20 x 22
FLY BRACE - 5 of 14.20 x 22

END WALL MULLION TO RAFTER

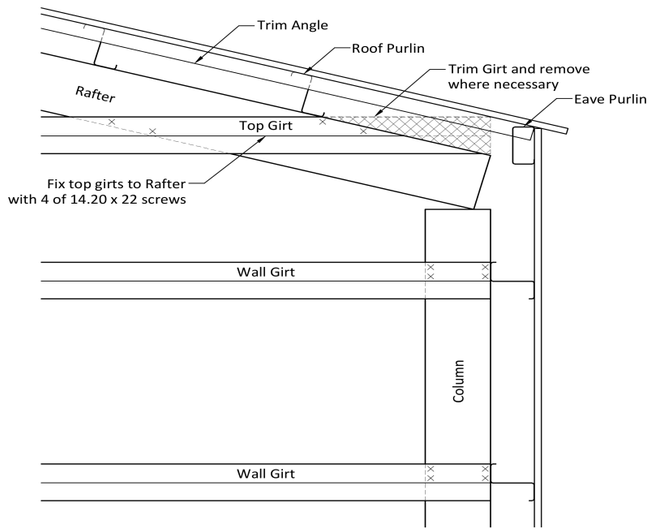

GABLE END TOP GIRT FIXING - Z

This copied document is made available for the sole purpose of enabling its consideration & review as part of a planning process under the Planning and Environment Act 1987. The document must not be used for any purpose which may breach any copyright.

Purchaser Name: Amy Turnbull			
Site Address: 3 Darling Court Wandong VIC 3758 Australia			
Drawing # WSS221082 - 8	Print Date: 31/03/22	**Connection Details** **NOT FOR CONSTRUCTION** Not to Scale Page 3 of 9 © Copyright SteelxIP Pty Ltd	Seller: Wide Span Sheds Pty Ltd Wide Span Sheds Pty Ltd Phone: 07 5657 8888 Fax: 07 5657 8899 Email: admin@sheds.com.au

Apex Engineering Group PTY LTD
ACN 632 588 562
MIE Aust. (Registered NER Structural) 5276680
QLD : RPEQ No. 24223; TAS : 185770492; VIC : PE0003848; N.T : 303557ES;
Practising Professional Structural & Civil Engineers

Signature:

John Ronaldson

Date: 31/03/22

× FIXING SCREWS - 4 of 14.20 x 22

GIRT FIXING TO RAFTER - Z

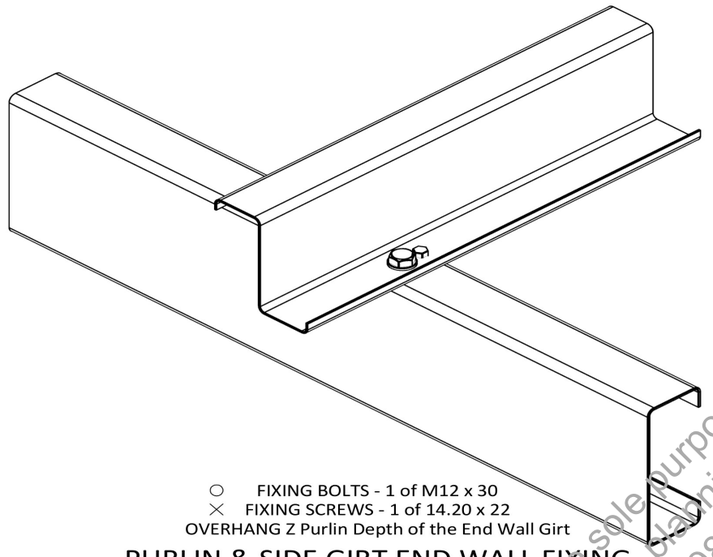

○ FIXING BOLTS - 1 of M12 x 30
× FIXING SCREWS - 1 of 14.20 x 22
OVERHANG Z Purlin Depth of the End Wall Girt

PURLIN & SIDE GIRT END WALL FIXING
Z PURLIN - SINGLE COLUMN OR RAFTER

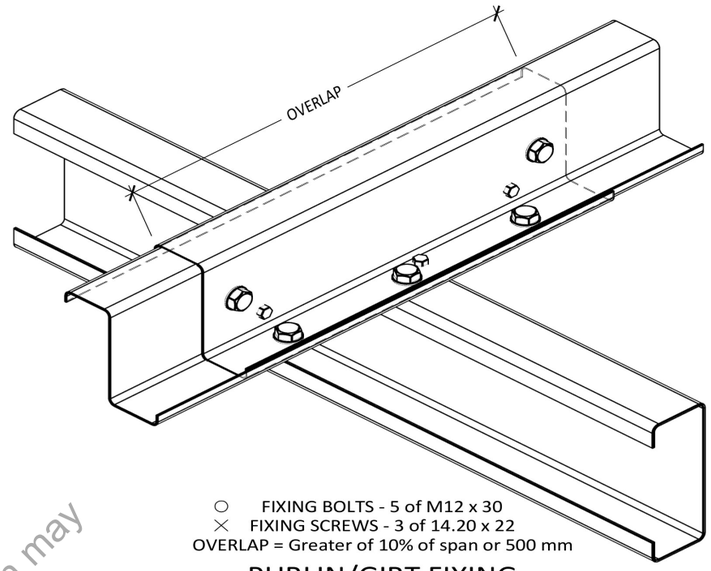

○ FIXING BOLTS - 5 of M12 x 30
× FIXING SCREWS - 3 of 14.20 x 22
OVERLAP = Greater of 10% of span or 500 mm

PURLIN/GIRT FIXING
SINGLE C SECTION COLUMNS OR RAFTERS

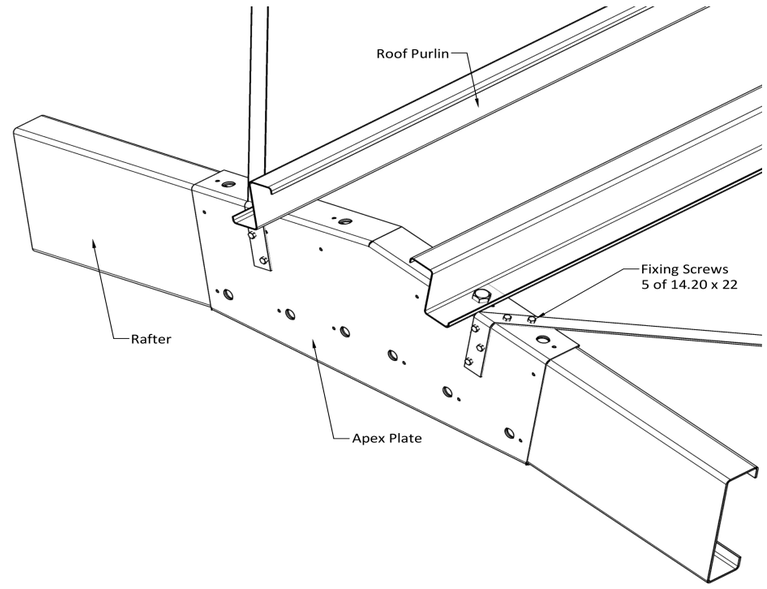

BRACING CONNECTION AT APEX

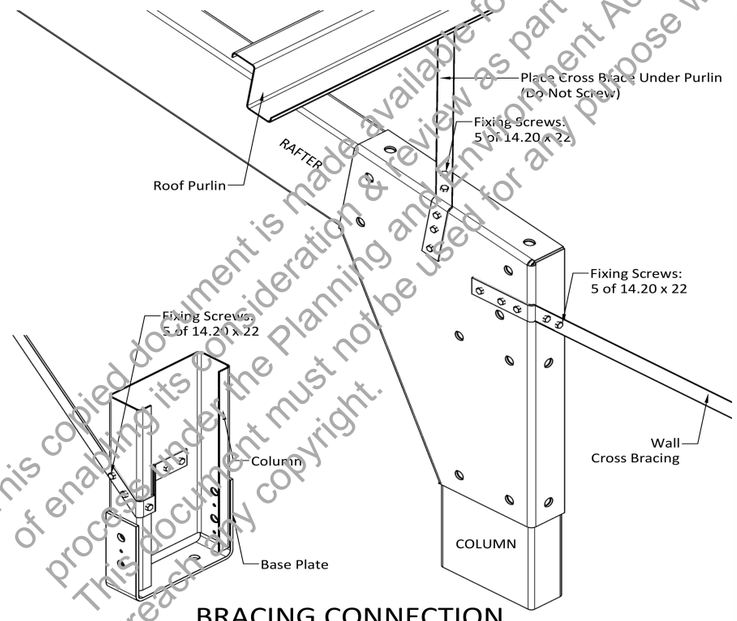

BRACING CONNECTION

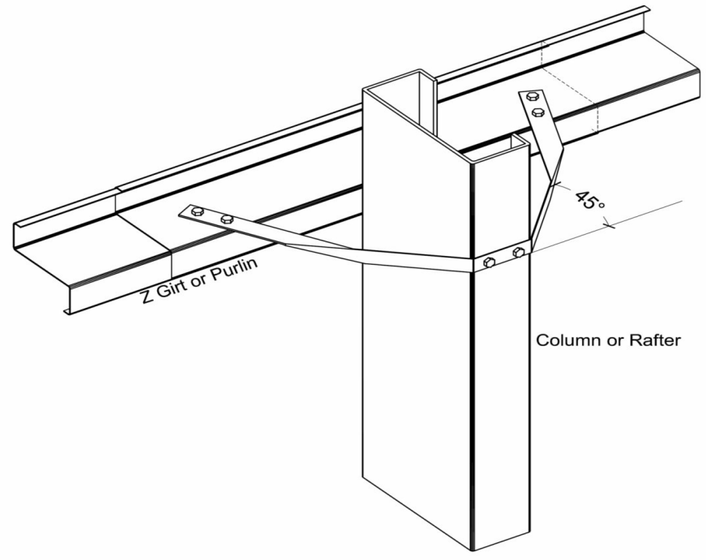

FIXING SCREWS - 6 of 14.20 x 22

FLY BRACING

This copied document is made available for the sole purpose of enabling its consideration & review as part of a planning process under the Planning and Environment Act 1987. This document must not be used for any purpose which may breach any copyright.

Purchaser Name: Amy Turnbull		**Connection Details** **NOT FOR CONSTRUCTION** Not to Scale Page 4 of 9 © Copyright SteelxIP Pty Ltd	Seller: Wide Span Sheds Pty Ltd Wide Span Sheds Pty Ltd Phone: 07 5657 8888 Fax: 07 5657 8899 Email: admin@sheds.com.au	Apex Engineering Group PTY LTD ACN 632 588 562 MIE Aust. (Registered NER Structural) 5276680 QLD : RPEQ No. 24223; TAS : 185770492; VIC : PE0003848; N.T : 303557ES; Practising Professional Structural & Civil Engineers Signature: John Ronaldson Date: 31/03/22
Site Address: 3 Darling Court Wandong VIC 3758 Australia				
Drawing # WSS221082 - 8	Print Date: 31/03/22			

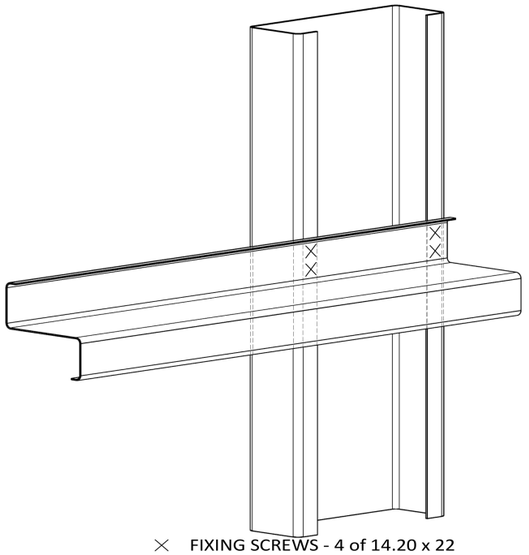

× FIXING SCREWS - 4 of 14.20 x 22

GIRT FIXING - Z

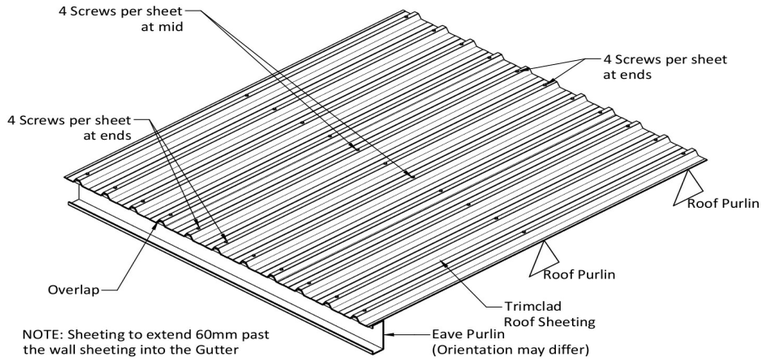

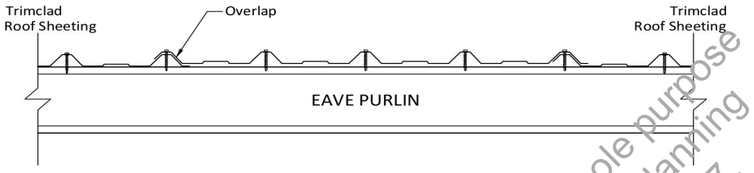

Roofing Screws - 12.14 x 45 Hex Seal High Grip with Cyclonic Washer

TRIMCLAD ROOF SHEET FIXING

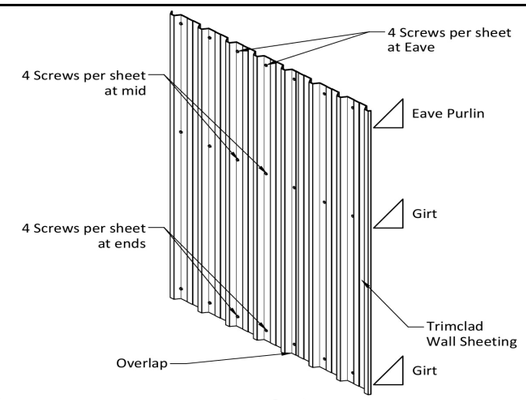

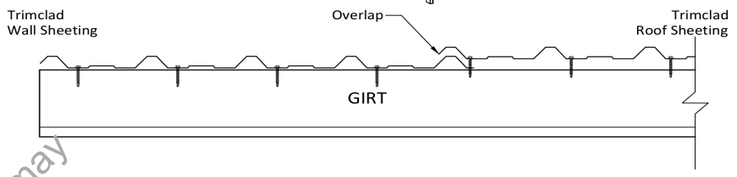

Wall Screws - 10.16 x 16 Hex

WALL SHEETING CONNECTION DETAILS

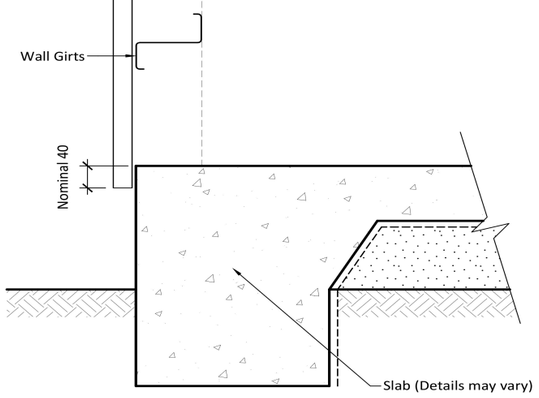

WALL SHEET OVERHANG DETAIL

This copied document is made available for the sole purpose of enabling its consideration & review as part of a planning process under the Planning and Environment Act 1987. This document must not be used for any purpose which may breach any copyright.

Purchaser Name: Amy Turnbull		**Connection Details** **NOT FOR CONSTRUCTION** Not to Scale Page 5 of 9 © Copyright Steelx IP Pty Ltd	Seller: Wide Span Sheds Pty Ltd Wide Span Sheds Pty Ltd Phone: 07 5657 8888 Fax: 07 5657 8899 Email: admin@sheds.com.au	Apex Engineering Group PTY LTD ACN 632 588 562 MIE Aust. (Registered NER Structural) 5276680 QLD : RPEQ No. 24223; TAS : 185770492; VIC : PE0003848; N.T : 303557ES; Practising Professional Structural & Civil Engineers Signature: J Ronaldson John Ronaldson Date: 31/03/22
Site Address: 3 Darling Court Wandong VIC 3758 Australia				
Drawing # WSS221082 - 8	Print Date: 31/03/22			

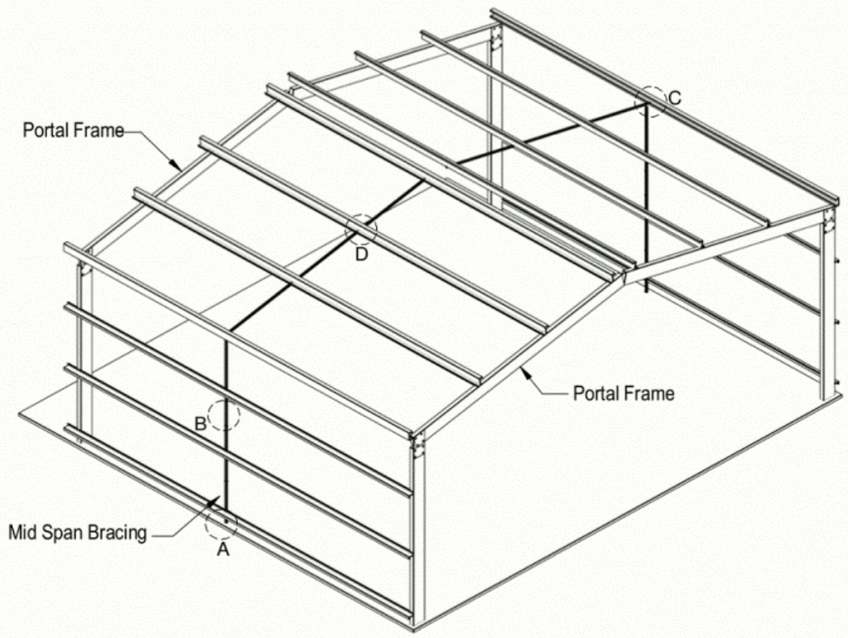

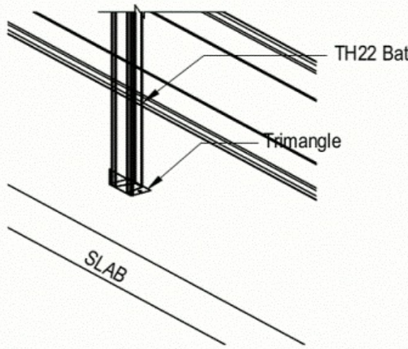

Detail at A

Fix to bracket with 2 of 14.20 x 22 fixing screws
Fix to concrete with 2 x M8-40 Dynabolts
PIERS ONLY FINISH @BOTTOM GIRT

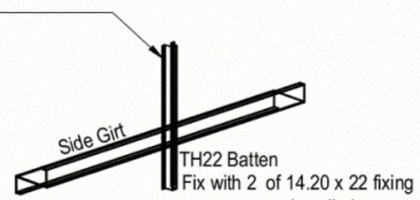

Detail at B

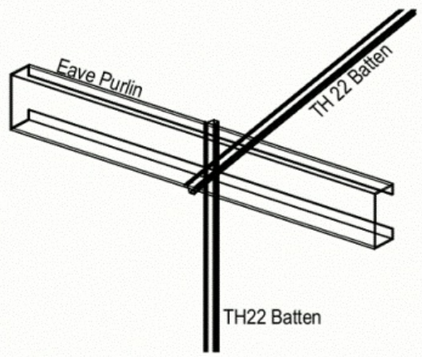

Detail at C

Fix Rafter batten with 2 of 14.20 x 22 screws to Eave Purlin
Fix vertical batten with 2 of 14.20 x 22 screws to each eave purlin lip

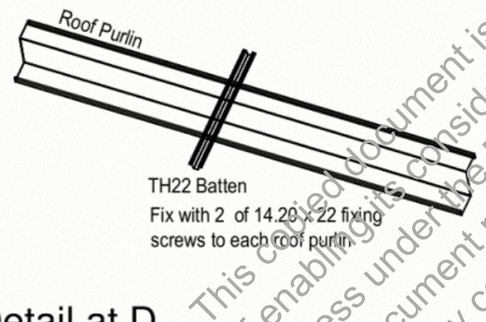

Detail at D

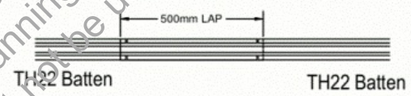

Batten Overlap

Note: Mid Span Bracing is located midbay equidistant from each portal frame.
To extend battens, Lap battens 50mm with 4 screws

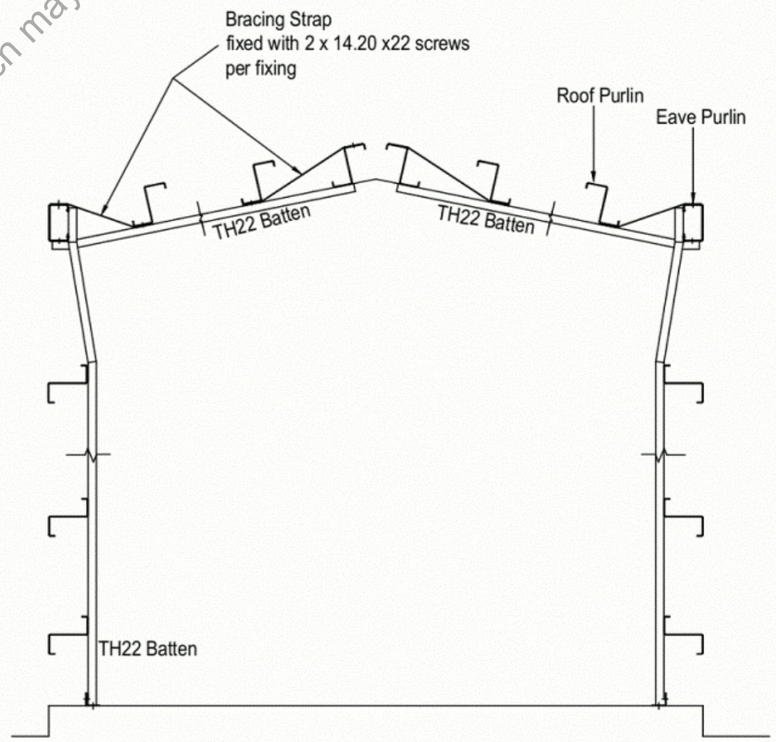

Note: Fix Bracing Strap First, then fix batten over bracing strap to maintain line.

This copied document is made available for the sole purpose of enabling its consideration & review as part of a planning process under the Planning and Environment Act 1987. This document must not be used for any purpose which may breach any copyright.

Purchaser Name: Amy Turnbull		**Connection Details** **NOT FOR CONSTRUCTION** Not to Scale Page 6 of 9 © Copyright SteelxIP Pty Ltd	Seller: Wide Span Sheds Pty Ltd Wide Span Sheds Pty Ltd Phone: 07 5657 8888 Fax: 07 5657 8899 Email: admin@sheds.com.au	Apex Engineering Group PTY LTD ACN 632 588 562 MIE Aust. (Registered NER Structural) 5276680 QLD : RPEQ No. 24223; TAS : 185770492; VIC : PE0003848; N.T : 303557ES; Practising Professional Structural & Civil Engineers Signature: J Ronaldson John Ronaldson Date: 31/03/22
Site Address: 3 Darling Court Wandong VIC 3758 Australia				
Drawing # WSS221082 - 8	Print Date: 31/03/22			

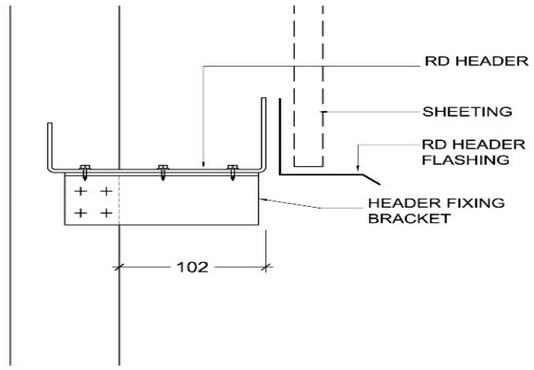

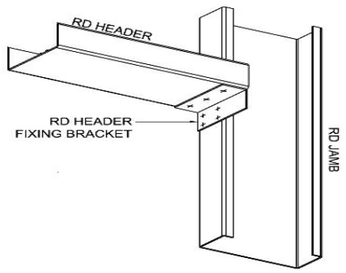

× FIXING SCREWS - 7 of 14.20 x 22
GIRT FIXING TO PA DOOR JAMB

RD HEADER FIXING BRACKET

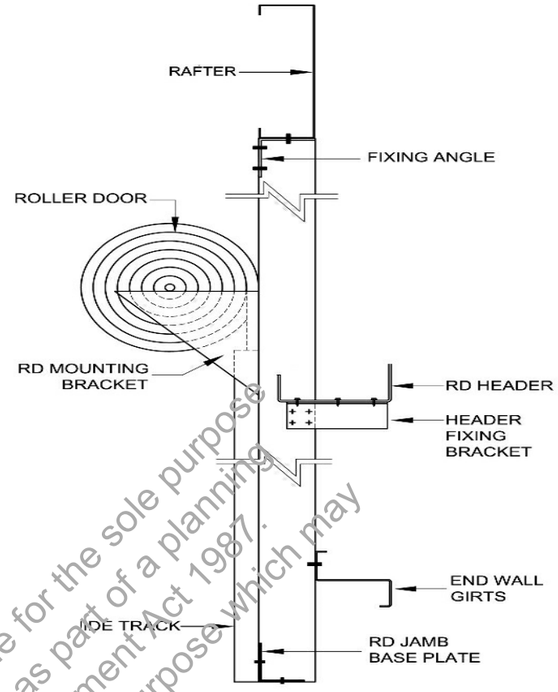

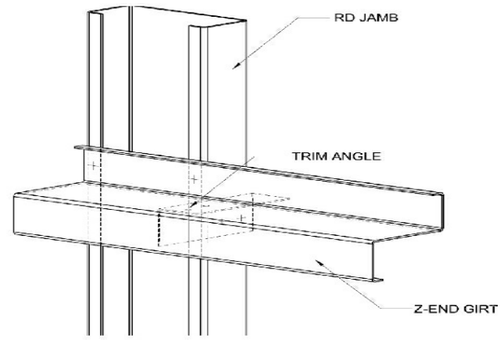

× FIXING SCREWS - 2 of 14.20 x 22 TO JAMB LIPS
- 4 of 14.20 x 22 TO TRIM ANGLE

GIRT FIXING TO ROLLER DOOR JAMBS

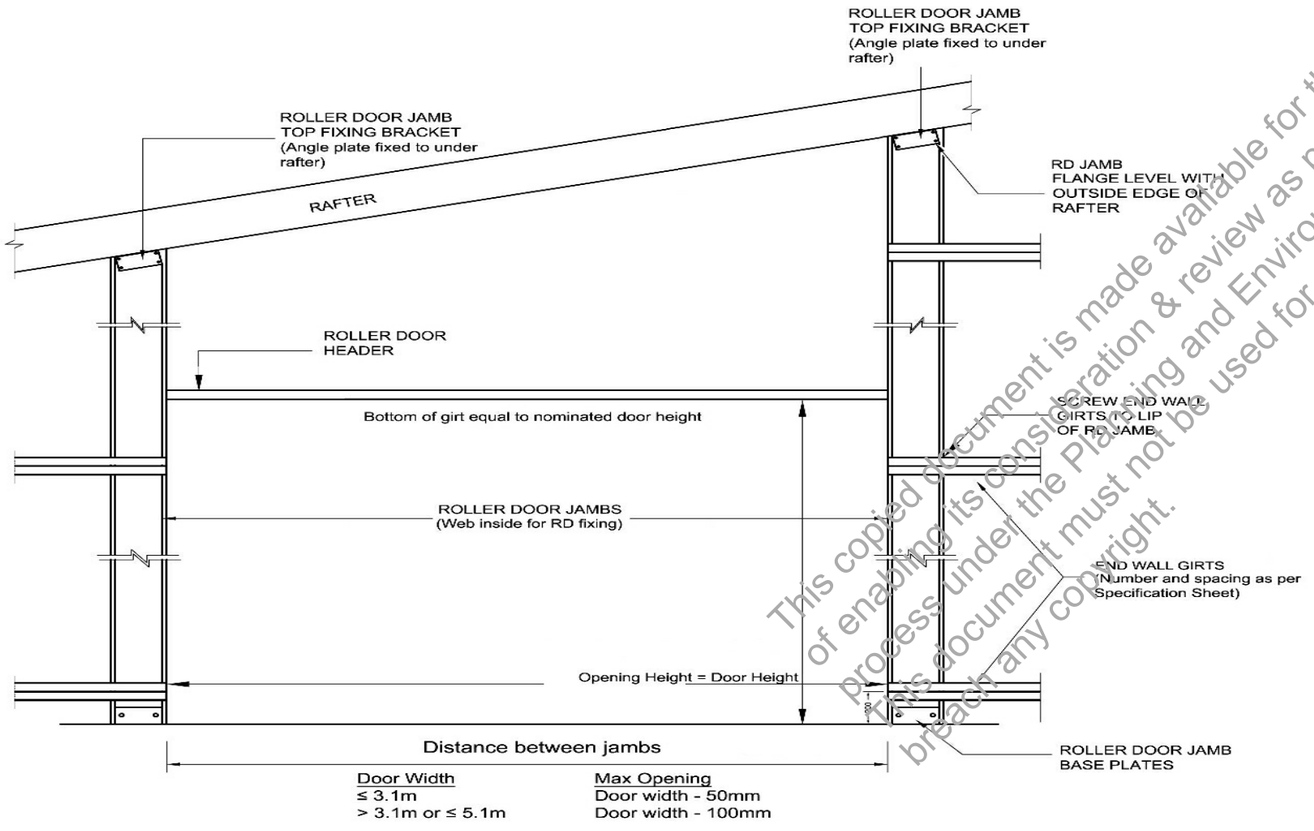

Door Width	Max Opening
≤ 3.1m	Door width - 50mm
> 3.1m or ≤ 5.1m	Door width - 100mm

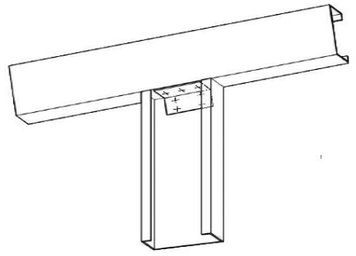

○ FIXING BOLTS - NIL
× FIXING SCREWS - 7 x 14.20 x 22

ROLLER DOOR JAMB TOP FIXING

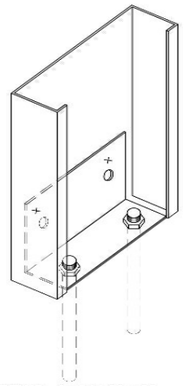

× FIXING SCREWS - 2 of 14.20 x 22
○ FIXING BOLTS - 2 of M12 x 30 - FOR C150 & C200 JAMBS
○ FIXING BOLTS - 2 of M16 x 30 - FOR C250 & C300 JAMBS
2 of M12 X 75 DYNABOLTS - FOR C150 & C200 JAMBS
2 of M16 x 110 DYNABOLTS - FOR C250 & 300 JAMBS

ROLLER DOOR JAMB BASE PLATE

ROLLER DOOR DETAILS
(Door under 4.0m)
Gable end wall ONLY

This copied document is made available for the sole purpose of enabling its consideration & review as part of a planning process under the Planning and Environment Act 1987. This document must not be used for any purpose which may breach any copyright.

Purchaser Name: Amy Turnbull		**Connection Details** **NOT FOR CONSTRUCTION** Not to Scale Page 7 of 9 © Copyright Steelx IP Pty Ltd	Seller: Wide Span Sheds Pty Ltd Wide Span Sheds Pty Ltd Phone: 07 5657 8888 Fax: 07 5657 8899 Email: admin@sheds.com.au
Site Address: 3 Darling Court Wandong VIC 3758 Australia			
Drawing # WSS221082 - 8	Print Date: 31/03/22		

Apex Engineering Group PTY LTD
ACN 632 588 562
MIE Aust. (Registered NER Structural) 5276680
QLD : RPEQ No. 24223; TAS : 185770492; VIC : PE0003848; N.T : 303557ES;
Practising Professional Structural & Civil Engineers

Signature:

John Ronaldson

Date: 31/03/22

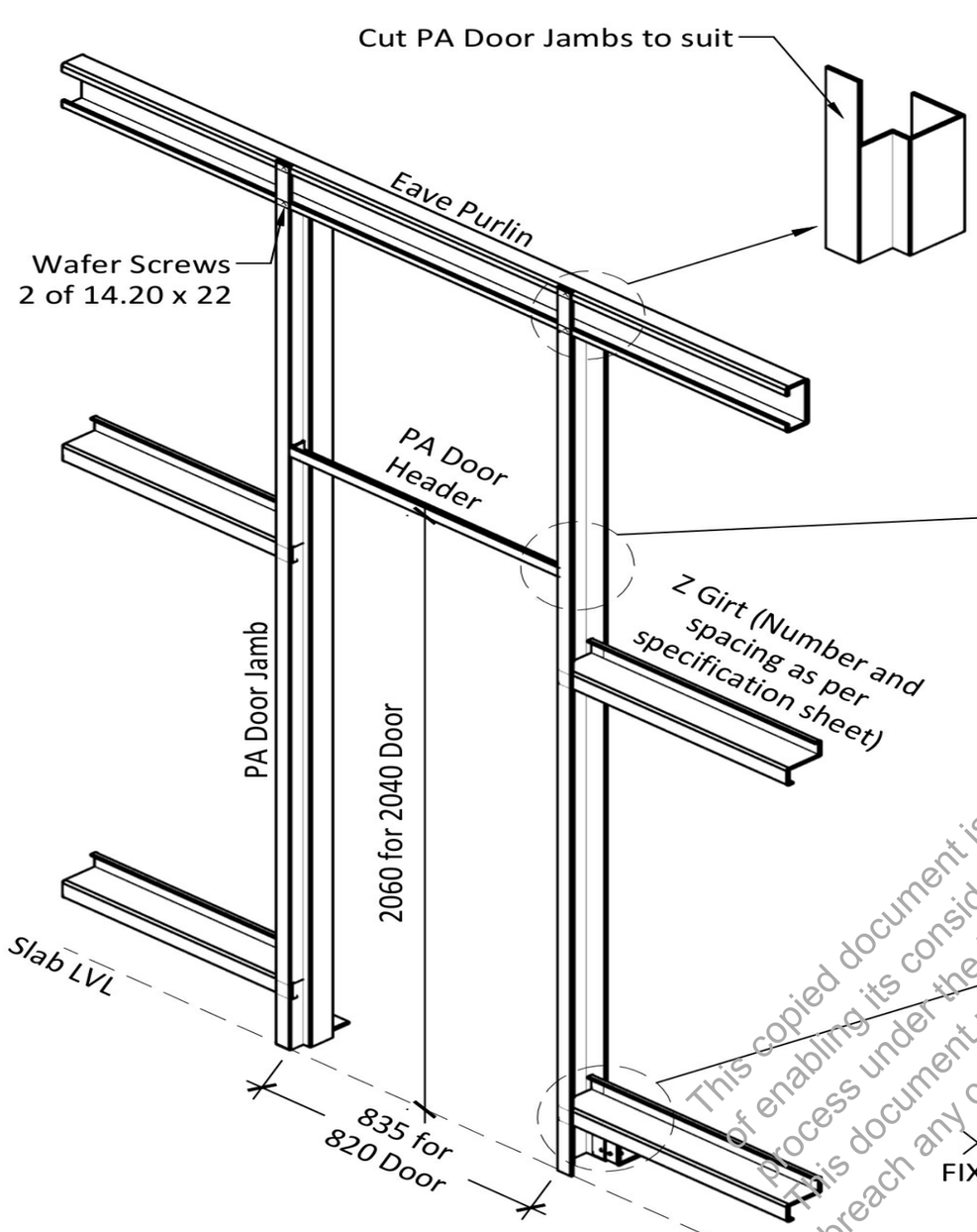

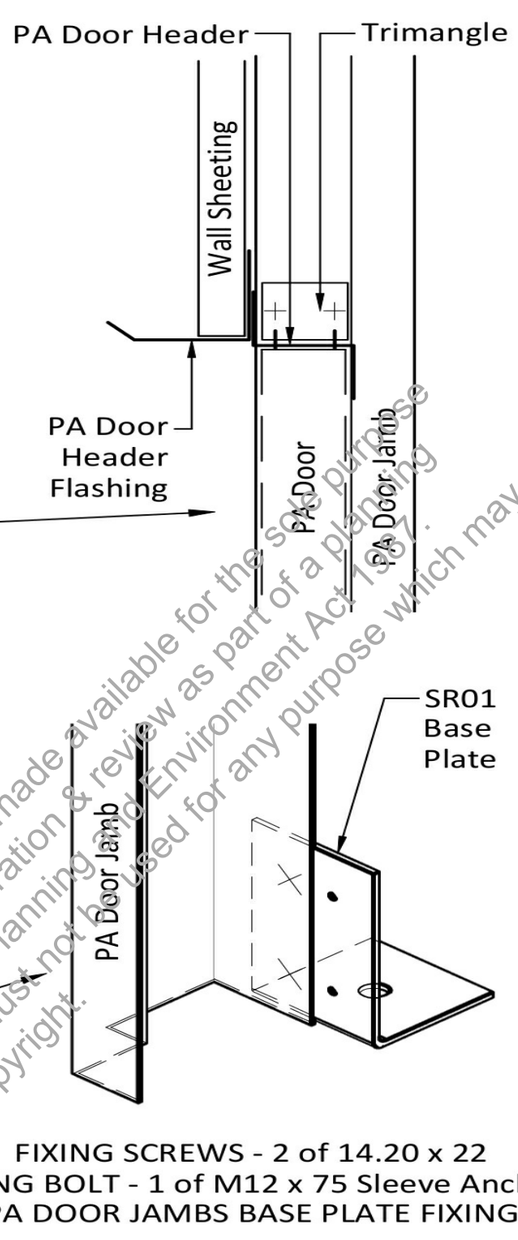

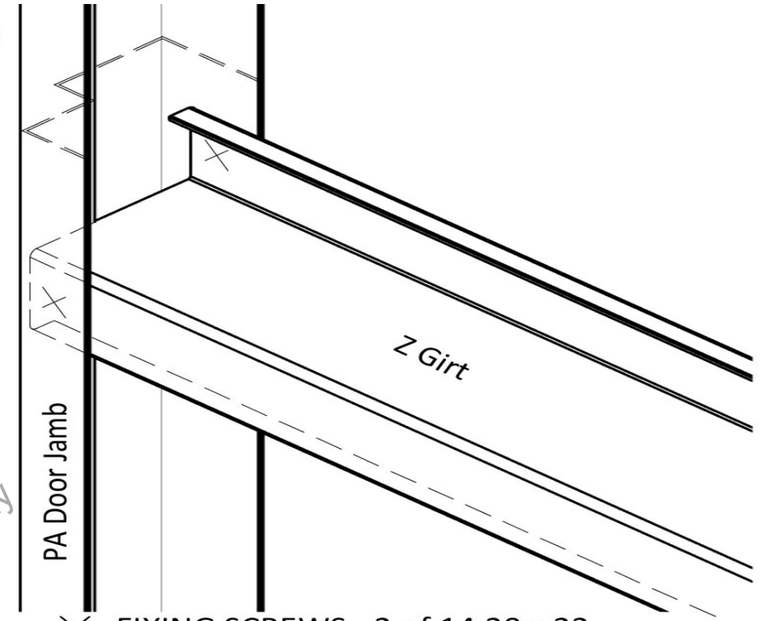

FIXING SCREWS - 2 of 14.20 x 22
GIRT FIXING TO PA DOOR JAMB

FIXING SCREWS - 2 of 14.20 x 22
FIXING BOLT - 1 of M12 x 75 Sleeve Anchor
PA DOOR JAMBS BASE PLATE FIXING

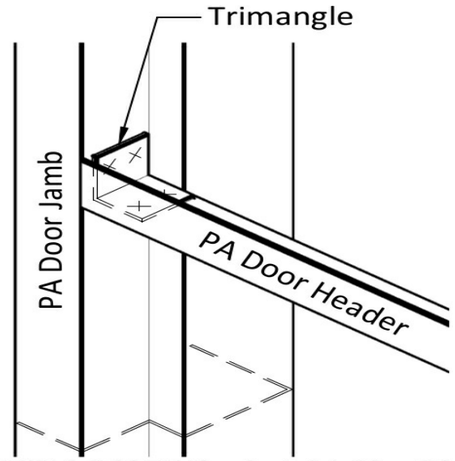

FIXING SCREWS - 4 of 14.20 x 22
PA DOOR HEADER FIXING TO JAMBS

PERSONAL ACCESS (PA) DOOR - FITTED TO EAVE PURLIN

This copied document is made available for the sole purpose of enabling its consideration & review as part of a planning process under the Planning and Environment Act 1987. This document must not be used for any purpose which may breach any copyright.

Purchaser Name: Amy Turnbull		**Connection Details** **NOT FOR CONSTRUCTION** Not to Scale Page 8 of 9 © Copyright SteelxIP Pty Ltd	Seller: Wide Span Sheds Pty Ltd Wide Span Sheds Pty Ltd Phone: 07 5657 8888 Fax: 07 5657 8899 Email: admin@sheds.com.au	Apex Engineering Group PTY LTD ACN 632 588 562 MIE Aust. (Registered NER Structural) 5276680 QLD : RPEQ No. 24223; TAS : 185770492; VIC : PE0003848; N.T : 303557ES; Practising Professional Structural & Civil Engineers Signature: J Ronaldson John Ronaldson Date: 31/03/22
Site Address: 3 Darling Court Wandong VIC 3758 Australia				
Drawing # WSS221082 - 8	Print Date: 31/03/22			

Fixing Instructions

Transverse wires shall be on top of the longitudinal wires

All Longitudinal wires passed around anchor points with the tail of each wire being twisted four times around the main portion of the same wire.

End joints in wire, two transverse wires are placed together, the longitudinal tail wires (approx 300mm long) are tied around each other, one being twisted four times around the main portion of the same wire, the other longitudinal wire twisted once around the main portion of the same wire then four times around the transverse wires.

Side laps (i) For purlin spacing span/less than 1200mm, the runs of mesh shall be side-lapped by a minimum of one mesh spacing (150mm). (ii) For purlin spacing/span between 1200-2200mm, the runs of mesh shall be side-lapped by a minimum of one mesh spacing (150mm). Side laps shall be secured with ring fasteners fabricated from minimum 1.90mm diameter wire, or equivalent. fitted at maximum 900mm centres between each purlin on one side of the lap (iii) For purlin spacing/span greater than 2200mm, the runs of mesh shall be side-lapped by a minumum of two mesh spacing (300mm). Side laps shall be secured with ring fasteners fabricated from minimum 1.90mm diameter wire, or equivalent, fitted at maximum 600mm centers between purlin/span on both sides of the lap.

Toughness. Mesh shall be pulled taut to ensure only natural sag between each purlin or roof member.

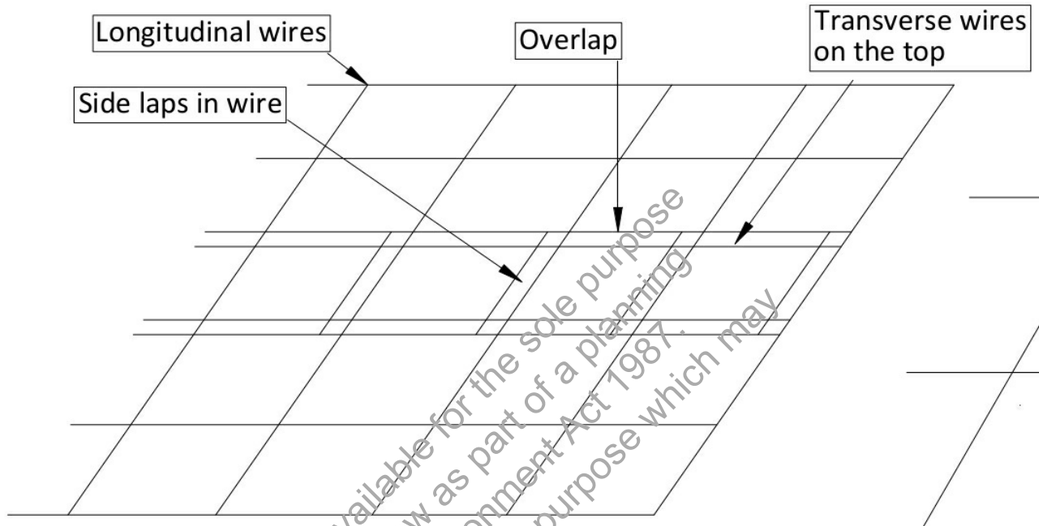

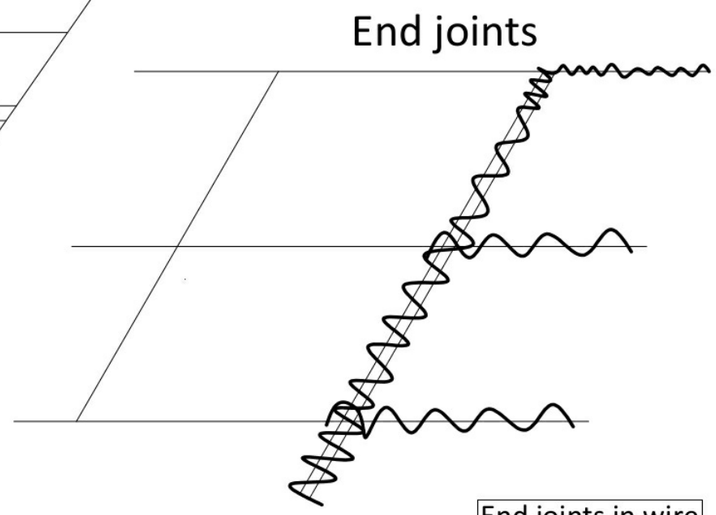

(Steel Z or Tophat purlin)

Longitudinal wires wrapped around steel purlin.

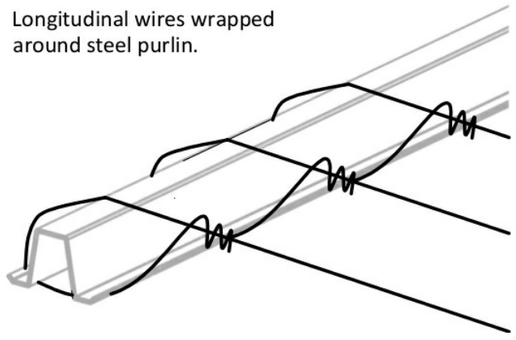

(Steel Z or Tophat purlin)

Longitudinal wires wrapped around steel purlin.

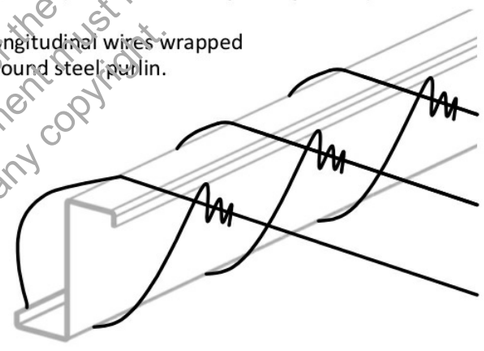

(End rafters or Eave purlin)

Longitudinal wires wrapped around steel purlin.

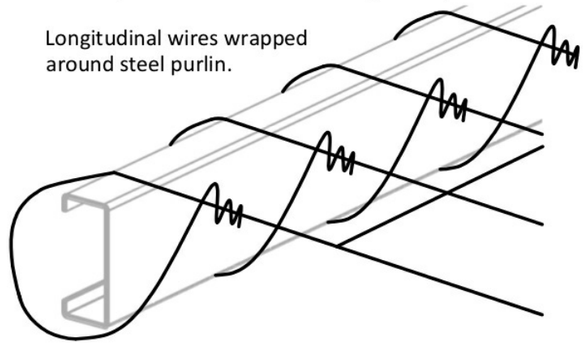

This copied document is made available for the sole purpose of enabling its consideration & review as part of a planning process under the Planning and Environment Act 1987. This document must not be used for any purpose which may breach any copyright.

Purchaser Name: Amy Turnbull		**Connection Details** **NOT FOR CONSTRUCTION** Not to Scale Page 9 of 9 © Copyright Steelx IP Pty Ltd	Seller: Wide Span Sheds Pty Ltd Wide Span Sheds Pty Ltd Phone: 07 5657 8888 Fax: 07 5657 8899 Email: admin@sheds.com.au
Site Address: 3 Darling Court Wandong VIC 3758 Australia			
Drawing # WSS221082 - 8	Print Date: 31/03/22		

Apex Engineering Group PTY LTD
ACN 632 588 562
MIE Aust. (Registered NER Structural) 5276680
QLD : RPEQ No. 24223; TAS : 185770492; VIC : PE0003848; N.T : 303557ES;
Practising Professional Structural & Civil Engineers

Signature:

John Ronaldson

Date: 31/03/22

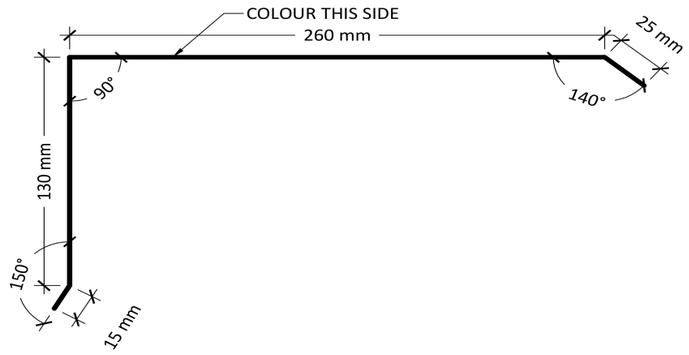

Barge Capping - Trimclad

XF11

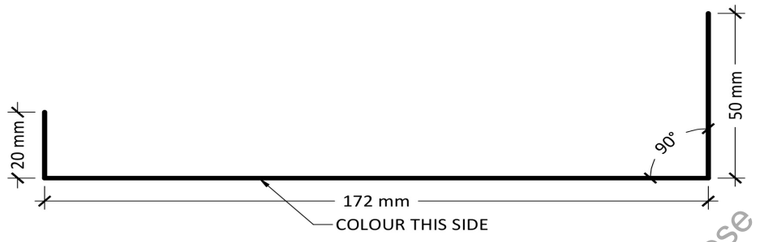

RD Head Cover Flashing

XF118

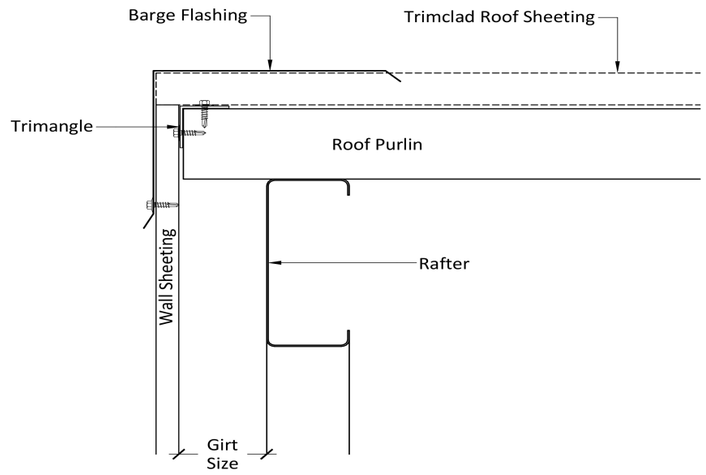

Barge Flashing XF11 - Sheeting Gable

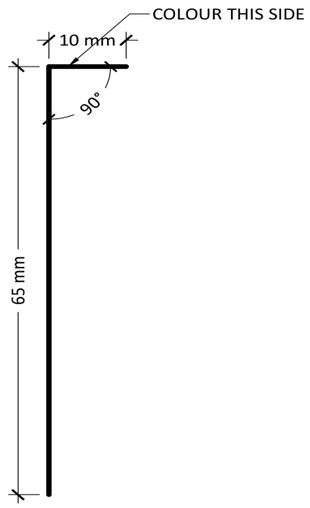

RD Side - Cover Flash

XF18

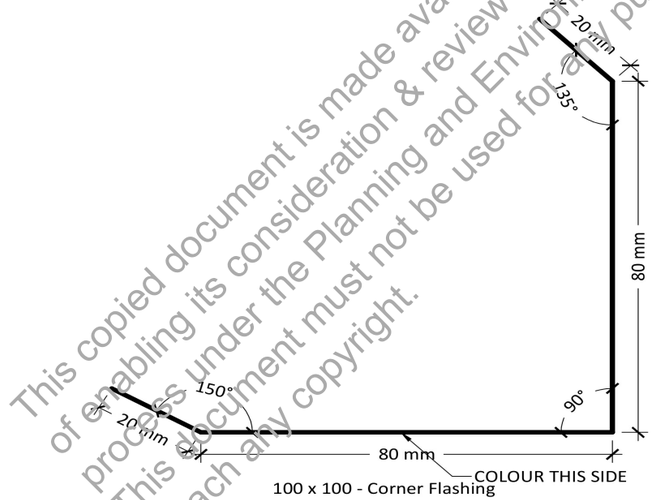

100 x 100 - Corner Flashing

XF21

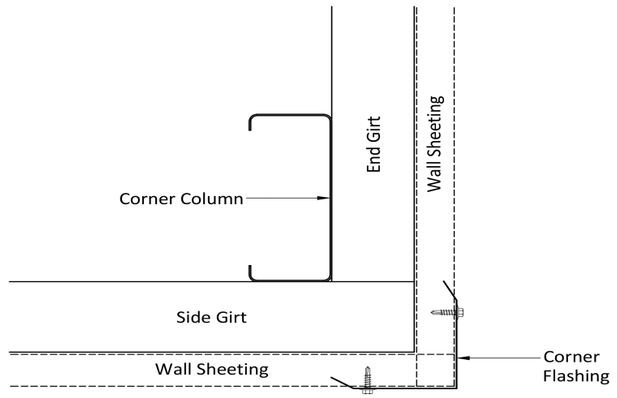

Corner Flashing XF21 - Connection

This copied document is made available for the sole purpose of enabling its consideration & review as part of a planning process under the Planning and Environment Act 1987. This document must not be used for any purpose which may breach any copyright.

Purchaser Name: Amy Turnbull		**Flashing Fixing Details** **NOT FOR CONSTRUCTION** Not to Scale Page 1 of 3 © Copyright SteelxIP Pty Ltd	Seller: Wide Span Sheds Pty Ltd Wide Span Sheds Pty Ltd Phone: 07 5657 8888 Fax: 07 5657 8899 Email: admin@sheds.com.au
Site Address: 3 Darling Court Wandong VIC 3758 Australia			
Drawing # WSS221082 - 9	Print Date: 31/03/22		

Apex Engineering Group PTY LTD
ACN 632 588 562
MIE Aust. (Registered NER Structural) 5276680
QLD : RPEQ No. 24223; TAS : 185770492; VIC : PE0003848; N.T : 303557ES;
Practising Professional Structural & Civil Engineers

Signature:

John Ronaldson

Date: 31/03/22

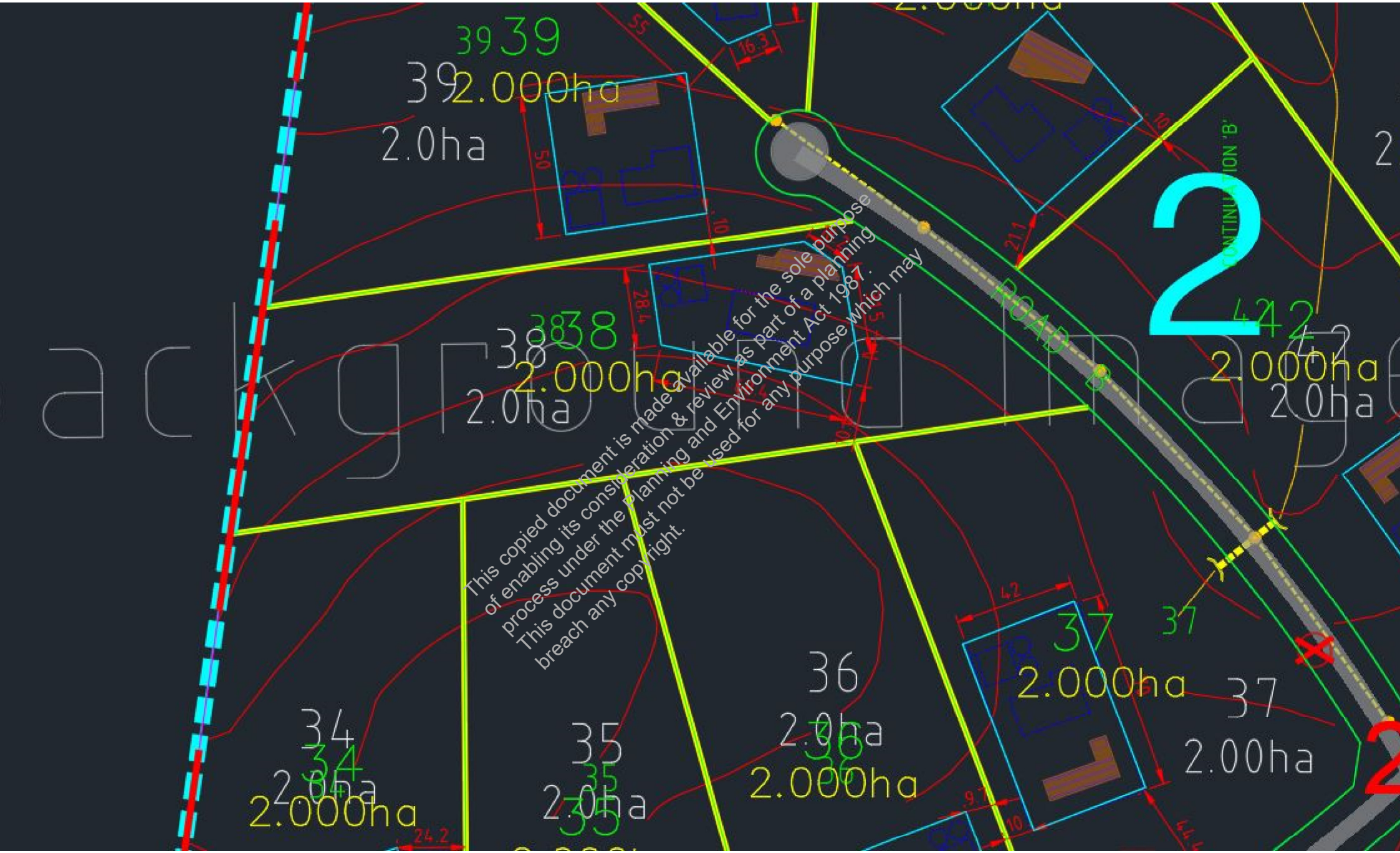
39
2.000ha
2.0ha
38
2.000ha
2.0ha
34
2.0ha
2.000ha
35
2.0ha
36
2.0ha
2.000ha
37
2.000ha
37
2.00ha
42
2.000ha
2.0ha
ROAD 'B'
CONTINUATION 'B'
This copied document is made available for the sole purpose of enabling its consideration & review as part of a planning process under the Planning and Environment Act 1987. This document must not be used for any purpose which may breach any copyright.